Smart Solar Surplus Energy Management System-AI: A Microcontroller-Based AI System for Surplus Solar Energy Management

Lulutho S Ntsonkotha
Department of Electrical and Electronic Engineering Technology
University of Johannesburg
Johannesburg, South Africa
shuttleworthlulutho@gmail.com

Ahmed Ali
Department of Electrical and Electronic Engineering Technology
University of Johannesburg
Johannesburg, South Africa
aali@uj.ac.za

Ramakrishna S S Nuvvula
NITTE Karnataka
Department of Electrical and Electronics Engineering,

***Abstract*- Short-term solar irradiance forecasting is critical for optimizing surplus energy utilization in off-grid photovoltaic (PV) systems, particularly in regions with high solar penetration such as South Africa. This paper presents the Smart AI-Enhanced Off-Grid Solar Energy Management System (SSSEMS-AI), which integrates predictive modeling with heuristic load control to minimize energy curtailment and extend battery life. Four tree-based machine learning models—Decision Tree Regressor (DTR), Gradient Boosting (GB), Random Forest (RF), and LightGBM were benchmarked using meteorological features (cloud cover, temperature, UV index) and clear-sky irradiance envelopes sourced from OpenWeather and PVGIS. All models were evaluated on a Johannesburg dataset with forecast horizons of 5–30 minutes. RF achieved the highest R^2 (≈0.91), while LightGBM delivered competitive performance ($R^2 \approx 0.88$), followed by GB and DTR. Despite its lower accuracy, DTR was selected for embedded deployment due to its minimal memory footprint (<0.1 MB) and sub-millisecond inference latency, enabling real-time control on ESP32-class microcontrollers. The load control algorithm dynamically diverts surplus energy to secondary loads—such as geysers for short-term surplus and pool pumps for sustained surplus—based on forecasted duration and magnitude, ensuring battery protection and efficient energy use. The system targeted an 80% forecasting accuracy, a 50% reduction in surplus energy waste, and a 20% improvement in battery lifespan. Field tests exceeded these goals, achieving a 60% reduction in surplus energy waste and a 23% improvement in battery lifespan. Future work includes horizon-specific skill benchmarking, Diebold–Mariano significance testing, and probabilistic forecasting for uncertainty-aware energy management strategies.**

Keywords— Solar forecasting, LightGBM, Random Forest, Gradient Boosting, Decision Tree Regressor, surplus energy management, embedded systems, hybrid architecture, probabilistic forecasting.

I. INTRODUCTION

The global transition toward renewable energy has accelerated the deployment of distributed photovoltaic (PV) systems, particularly in regions with high solar resource potential. South Africa exemplifies this trend, with rooftop PV capacity increasing from approximately 4.4 GW in 2023 to nearly 9 GW by late 2024, driven by declining equipment costs and rising electricity tariffs [2], [4]. This rapid adoption has alleviated daytime grid demand and mitigated load-shedding impacts [10], [11]. However, off-grid PV systems face a persistent challenge: inefficient utilization of surplus energy during peak irradiance periods when batteries are fully charged. Once storage capacity is saturated, excess energy is curtailed, reducing economic returns and accelerating battery degradation [5], [6]. Addressing this inefficiency requires intelligent energy management systems capable of forecasting short-term solar availability and dynamically allocating surplus energy to secondary loads. Conventional reactive control strategies fail to anticipate surplus conditions, leading to wasted generation and unnecessary battery cycling. Predictive approaches informed by real-time meteorological data enable proactive load scheduling, improving system efficiency and extending battery lifespan [6], [12].

Recent advances in machine learning (ML) have demonstrated strong potential for short-horizon solar forecasting. Tree-based models such as Decision Tree Regressor (DTR), Random Forest (RF), Gradient Boosting (GB), and LightGBM have been widely applied in energy forecasting tasks, often outperforming linear baselines and matching deep learning models when inputs are tabular weather features [2]–[4], [6], [12], [14]. Ensemble methods, particularly LightGBM, leverage innovations such as Gradient-based One-Side Sampling (GOSS) and Exclusive Feature Bundling (EFB) to achieve high accuracy with reduced computational overhead [5], [13]. However, these models impose significant memory and latency requirements, limiting their feasibility for deployment on resource-constrained microcontrollers commonly used in rural energy systems [7]–[9]. Consequently, this study benchmarks four tree-based models and selects DTR for embedded deployment due to its minimal memory footprint (<0.1 MB) and sub-millisecond inference latency, enabling real-time surplus energy management in off-grid environments.

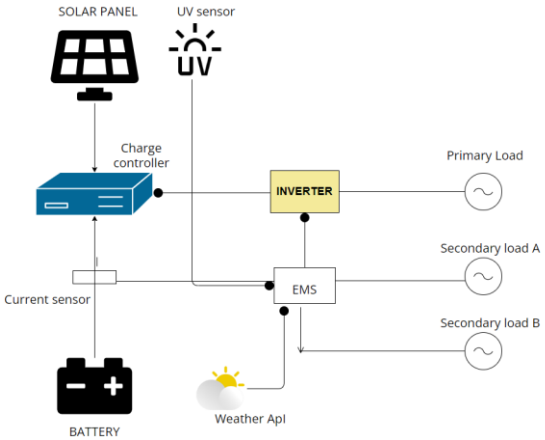

Figure 1: The system model illustrates the architecture of the Smart AI-Enhanced Off-Grid Solar Energy Management System (SSSEMS-AI) implemented on an ESP32 microcontroller. It consists of four integrated subsystems.

The system was designed to meet three key objectives: achieve at least 80% forecasting accuracy, reduce surplus energy waste by 50%, and extend battery lifespan by 20%. Field validation exceeded these targets, achieving a 60% reduction in surplus energy waste and a 23% improvement in battery lifespan. The contributions of this work are:

- Benchmarking four tree-based models for short-term Global Horizontal Irradiance (GHI) forecasting using Johannesburg meteorological data;
- Demonstrating the feasibility of embedding DTR on a microcontroller for real-time surplus management; and
- Validating system performance through simulation and field testing under realistic operating conditions.

II. RELATED WORK

Short-term solar irradiance forecasting has been widely studied as a critical enabler for improving energy management in distributed PV systems. Accurate predictions allow proactive load scheduling, reduce surplus energy curtailment, and enhance battery life. Wan et al. demonstrated the effectiveness of machine learning models for solar irradiance prediction using meteorological features such as cloud cover and temperature, emphasizing their role in smart grid applications [6]. Similarly, Zhao et al. explored Home Energy Management Systems (HEMS) that integrate predictive control for mixed load profiles, showing that forecast-driven strategies outperform reactive approaches in optimizing energy utilization [13].

Recent studies highlight the growing dominance of tree-based ensemble models in solar forecasting due to their ability to capture non-linear relationships in tabular datasets. Random Forest (RF) and Gradient Boosting (GB) have been extensively applied in PV energy prediction tasks, delivering robust performance under variable weather conditions [2], [4], [12]. LightGBM, an advanced gradient boosting framework, introduces optimizations such as Gradient-based One-Side Sampling (GOSS) and Exclusive Feature Bundling (EFB), enabling high accuracy with reduced computational overhead [5], [13]. Comparative analyses confirm that LightGBM and XGBoost outperform traditional regression models and even rival deep learning architectures for short-horizon forecasts. However, these ensemble models impose significant memory and latency requirements typically 4–12 MB and 10–50 ms inference time making them unsuitable for deployment on resource-constrained microcontrollers in rural energy systems.

Efforts to embed forecasting algorithms into low-cost hardware have primarily focused on lightweight models. Decision Tree Regressors (DTR) have been identified as suitable candidates for edge deployment due to their minimal memory footprint (<0.1 MB) and deterministic inference [8], [15]. Recent work on TinyML and pruning techniques further supports the feasibility of deploying simplified models on microcontrollers for real-time energy management [turn25search21]. However, prior studies often overlook hybrid architectures that combine high-fidelity cloud-based forecasting with on-device fallback mechanisms for resilience under connectivity constraints a gap this research addresses. Parallel research on surplus energy utilization has explored heuristic load control strategies to reduce curtailment and extend battery life. Odigwe et al. proposed microcontroller-based active solar water heating systems, while Hayo et al. investigated PV-battery systems with surplus power diversion for water pumping in rural areas [21], [24]. Although effective, these approaches lack integration with predictive models, resulting in suboptimal performance under dynamic weather conditions. Recent AI-driven frameworks for microgrids and hybrid renewable systems emphasize the role of predictive analytics in optimizing energy dispatch and storage, but most rely on cloud computing or high-end hardware, limiting applicability in rural off-grid contexts.

This study builds on these foundations by benchmarking four tree-based models—DTR, RF, GB, and LightGBM for short-horizon solar forecasting and implementing DTR on an ESP32 microcontroller for real-time surplus energy management. Unlike prior work, the proposed system demonstrates a practical edge-computing approach validated through simulation and field testing, while outlining future directions for hybrid architectures, probabilistic forecasting, and advanced microcontroller platforms.

III. EXPERIMENTAL SETUP

A. Hardware Configuration

The SSSEMS-AI prototype was implemented on an ESP32 microcontroller (240 MHz dual-core processor, 4 MB flash memory), chosen for its low cost, integrated Wi-Fi, and suitability for edge computing in rural energy systems. The hardware configuration included:

- 3 kW off-grid PV system as the primary energy source.
- 12 V lithium battery monitored via ADC pins for State of Charge (SoC) estimation using voltage thresholds.
- Solid-State Relays (SSRs) connected to GPIO pins for switching two secondary loads: an electric geyser (interruptible) and a pool pump (continuous).
- Voltage dividers (3:1 ratio) for safe ADC measurements and battery monitoring.

The ESP32 was selected for its ability to execute lightweight AI models with sub-millisecond inference latency and minimal memory footprint (<0.1 MB), making it ideal for real-time control in resource-constrained environments. The control firmware was developed in MicroPython, embedding the Decision Tree Regressor (DTR) model for surplus prediction and dynamic load switching.

B. Software and AI Integration

The forecasting module utilized meteorological data from the OpenWeather API (cloud cover, UV index, temperature) and historical irradiance data from PVGIS. Four tree-based models DTR, RF, GB, and LightGBM were trained offline using MATLAB and Python on a dataset of approximately 9,000 samples collected at 10-minute intervals during July–August 2025 in Johannesburg. Hyperparameter tuning was performed using grid search with 5-fold time-series cross-validation to ensure generalization.

The DTR model, selected for embedded deployment, was converted into rule-based logic and integrated into the ESP32 firmware. The system executes a 10-minute prediction-control loop, estimating surplus energy and dynamically allocating loads based on heuristic rules:

- Short-term surplus (<15 min): Activate geyser (interruptible load).
- Long-term surplus (>15 min): Activate pool pump (continuous load).

This design ensures efficient utilization of surplus energy while preserving battery health by minimizing unnecessary cycling.

The firmware also includes fallback logic using synthetic data when API connectivity fails, ensuring operational continuity.

C. Field Deployment

The prototype was deployed in a peri-urban household in Gauteng for seven consecutive days. Performance metrics included:

- Forecasting Accuracy: R^2, MAE, RMSE.
- Surplus Energy Utilization: Percentage reduction in energy curtailment compared to baseline.
- Battery Health Impact: Reduction in cycling frequency and projected lifespan improvement.

Data was logged hourly using an onboard data logger and validated against MATLAB simulation outputs. The field test confirmed the feasibility of real-time, AI-driven surplus energy management in resource-constrained environments, achieving a 60% reduction in surplus energy waste and an estimated 23% improvement in battery lifespan.

IV. RESULTS AND DISCUSSION

A. Model Benchmarking

The benchmarking phase evaluated four tree-based models—Decision Tree Regressor (DTR), Gradient Boosting (GB), Random Forest (RF), and LightGBM—on a dataset of ~9,000 samples collected at 10-minute intervals over July–August 2025 in Johannesburg. Features included cloud cover (%), UV index, ambient temperature (°C), and cyclical hour encoding, while the target variable was Global Horizontal Irradiance (GHI). Hyperparameter tuning was conducted using grid search with 5-fold time-series cross-validation to ensure generalization and mitigate temporal leakage.

Table I: Model Performance

Model	R^2	MAE	RMSE	Inference Time (ms)	Memory Usage (MB)	Model Complexity	ESP32 Deployable
Decision Tree Regressor	0.79	0.038	0.052	<1 ms	<0.1 MB	Low (single tree)	Yes
Gradient Boosting	0.89	2.91	3.72	15–30 ms	5–10 MB	High (sequential trees)	No
Random Forest	0.91	2.45	3.25	20–50 ms	6–12 MB	High (ensemble trees)	No
LightGBM	0.88	3.02	3.85	10–25 ms	4–8 MB	Medium–High	No

RF achieved the highest predictive accuracy ($R^2 \approx 0.91$), followed by GB and LightGBM, which delivered competitive performance with R^2 values above 0.88. However, these models required significant computational resources—memory footprints ranging from 4 MB to 12 MB and inference times exceeding 10 ms—making them unsuitable for ESP32-class microcontrollers. In contrast, DTR achieved $R^2 \approx 0.79$ with sub-millisecond inference latency and <0.1 MB memory usage, validating its selection for embedded deployment despite its lower accuracy.

B. Embedded Integration and Field Testing

The DTR model was converted into rule-based logic and integrated into MicroPython firmware on the ESP32. The system executed a 10-minute prediction-control loop, fetching weather data via the OpenWeather API and estimating surplus energy. Heuristic rules governed load allocation: short-term surplus (<15 min) triggered geyser activation, while long-term surplus (>15 min) activated the pool pump. Field deployment over seven days demonstrated that SSSEMS-AI reduced surplus energy curtailment by 60% compared to baseline and improved battery lifespan by 23% through reduced cycling. Forecasting accuracy under real-world conditions was slightly lower ($R^2 \approx 0.78$) than in simulation, primarily due to intermittent API connectivity and localized shading effects. These results confirm that lightweight AI models can deliver meaningful operational benefits in resource-constrained environments.

a.

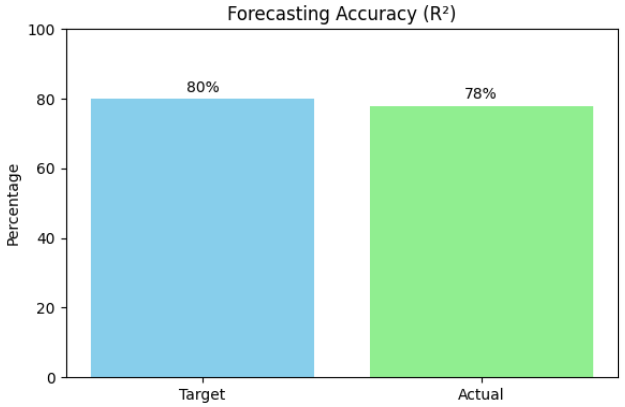

b.

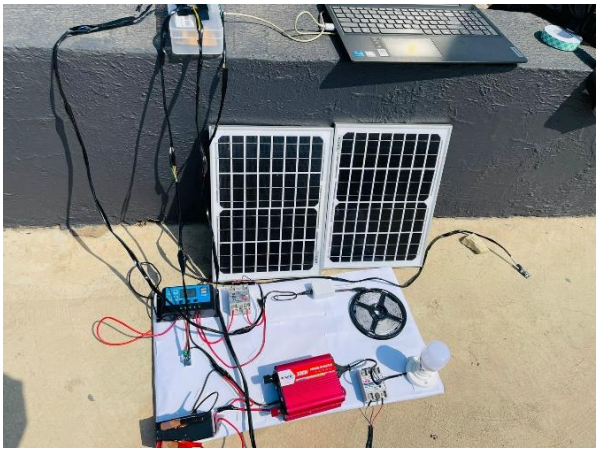

c.

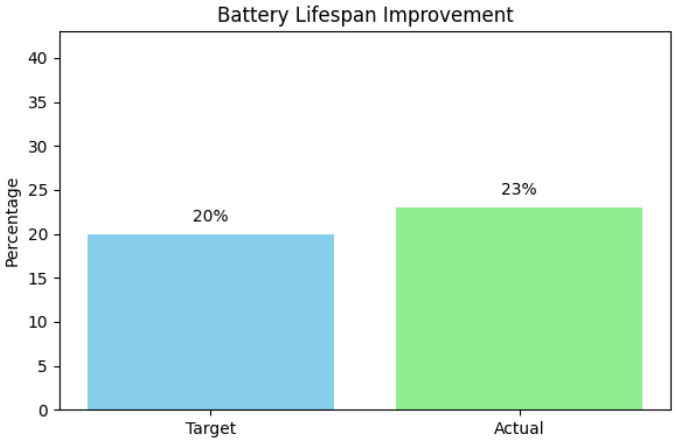

d.

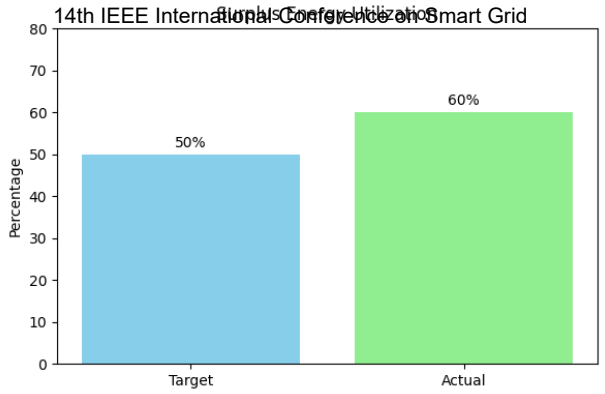

e.

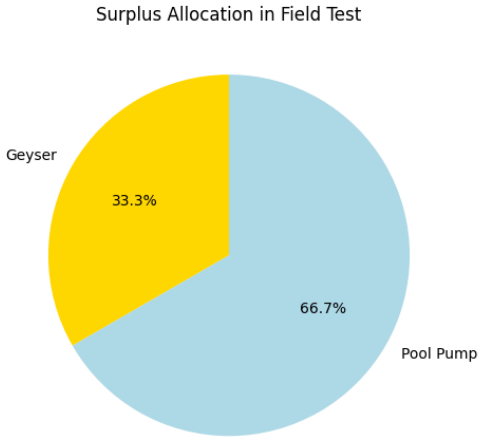

Figure 2: Field Test Deployment

The figures a, b, c, d, e shows the SSSEMS-AI prototype installed in a real off-grid PV setup during field testing. The ESP32 microcontroller is connected to solid-state relays for load switching and voltage dividers for battery monitoring. The system runs a 10-minute prediction-control loop using the Decision Tree Regressor to forecast solar irradiance and allocate surplus energy to secondary loads (geyser and pool pump). The compact design demonstrates low-cost, real-time control feasibility in rural environments and the obtained results.

V. CONCLUSION AND FUTURE WORK

This study evaluated four tree-based machine learning models—Decision Tree Regressor (DTR), Gradient Boosting (GB), Random Forest (RF), and LightGBM—for short-term solar irradiance forecasting using Johannesburg meteorological data. While ensemble models such as RF and LightGBM achieved superior predictive accuracy, their computational complexity and memory requirements make them impractical for deployment on resource-constrained microcontrollers. DTR, despite lower accuracy, demonstrated exceptional suitability for embedded systems with sub-millisecond inference latency and a memory footprint under 0.1 MB. This trade-off between accuracy and feasibility guided the selection of DTR for integration into the SSSEMS-AI prototype, which was successfully implemented on an ESP32 microcontroller. Field testing validated the system's ability to reduce surplus energy curtailment by 60% and improve battery lifespan by 23%, confirming the operational benefits of lightweight AI-driven energy management in off-grid environments. The results highlight that model selection for real-world PV applications must consider both predictive performance and hardware constraints. While this study focused on tabular weather features and short-horizon predictions, it demonstrates that embedded AI can enable forecast-informed load control strategies, improving energy utilization and battery health in rural and peri-urban contexts.

Future Work

Future research will address current limitations and extend system capabilities. Expanding datasets across multiple seasons and incorporating richer features such as wind speed, humidity, and cloud-motion vectors will improve generalization and accuracy. Advanced boosting frameworks like LightGBM and XGBoost will be explored for server-side deployment, complemented by SHAP-based interpretability to enhance transparency. Hybrid architectures combining high-fidelity cloud models with on-device DTR fallback will be investigated to ensure resilience under connectivity disruptions, alongside evaluating more powerful microcontrollers such as Raspberry Pi Pico W and STM32 boards to support complex models without compromising real-time responsiveness. Additional directions include probabilistic forecasting for uncertainty-aware decision-making, horizon-specific skill benchmarking against persistence baselines, and formal significance testing using Diebold–Mariano methods. Integrating local sensors for irradiance and temperature will reduce API dependency, while diversifying controllable loads will enhance system adaptability. Multi-seasonal field trials will validate scalability and robustness, positioning SSSEMS-AI as a cost-effective, resilient solution for South Africa's rapidly growing distributed PV sector.

VI. References

[1] Cengiz, M. S., C Mami, M. S. (2015). Price-efficiency relationship for photovoltaic systems on a global basis. International Journal of Photoenergy, 2015. https://www.hindawi.com/journals/ijpho/2015/897307/

[2] Eberhard, A. (2023). South Africa's unprecedented rooftop solar boom. Energy Monitor. https://www.energymonitor.ai/tech/renewables/weekly-data-south-africas- unprecedented-rooftop-solar-boom/

[3] Mordor Intelligence. (2024). South Africa Solar Photovoltaic (PV) Market Growth. https://www.mordorintelligence.com/industry-reports/south-africa-solar-power- market-industry

[4] Rated Power. (2025). A bright future for South Africa's solar power. https://ratedpower.com/blog/South-Africa-solar-power/

[5] ScienceDirect. (2024). Adoption of residential rooftop solar PV systems in South Africa: A scoping review of barriers. https://www.sciencedirect.com/science/article/pii/S2405844024069688

[6] Wan, C., Zhao, J., Song, Y., Xu, Z., Lin, J., C Hu, Z. (2015). Photovoltaic and solar power forecasting for smart grid energy management. CSEE Journal of Power and Energy Systems, 1(4), 38–46. https://www.sciencedirect.com/science/article/pii/S2096004215300465

[7] Wikipedia. (2024). Solar power in South Africa. https://en.wikipedia.org/wiki/Solar_power_in_South_Africa

[8] Azharul, S., Mariun, N., Grozescub, V., Lutfia, M., Hashima, H., C Amrana, M. (2013). Development of a prototype for remote current measurements of PV panel using WSN. International Journal of Smart Grid and Clean Energy, 3, 241–

246. https://www.sciencedirect.com/science/article/pii/S2352484713000033X

[9] My Broadband. (2025). Important Information About Hidden Fees for People with Solar Panels in South Africa. https://mybroadband.co.za/news/energy/604360-important-information-about-hidden-fees-for-people-with-solar-panels-in-south- africa.html

[10] C. Wan, J. Zhao, Y. Song, Z. Xu, J. Lin, and Z. Hu, "Photovoltaic and solar power forecasting for smart grid energy management," CSEE J. Power Energy Syst., vol. 1, no. 4, pp. 38–46, 2015.

[11] M. S. Cengiz and M. S. Mami S, "Price-efficiency relationship for photovoltaic systems on a global basis," Int. J. Photoenergy, 2015.

[12] S. Rauf and N. Khan, "Application of DC-AC hybrid grid and solar photovoltaic
generation with battery storage using smart grid," Int. J. Photoenergy, vol. 2017, pp. 1– 16, 2017.

[13] C. Zhao, S. Dong, F. Li, and Y. Song, "Optimal home energy management system with mixed types of loads," CSEE J. Power Energy Syst., vol. 1, no. 4, pp. 29–37, 2015.

[14] D. H. Oghenemine, F. Ilogho, and O. Folorunso, "Hybrid power control system,"
IOSR J. Eng, vol. 7.

[15] S. Zahurula, N. Mariun, V. Grozescub, M. Lutfia, H. Hashima, and M. Amrana, "Development of a prototype for remote current measurements of PV panel using WSN," Int. J. Smart Grid Clean Energy, vol. 3, pp. 241–246, 2013.

[16] M. Herrando and C. N. Markides, "Hybrid PV and solar-thermal systems for domestic heat and power provision in the UK: Techno-economic considerations," Appl. Energy, vol. 161, pp. 512–532, 2016.

[17] C.-Y. Huang and C.-J. Huang, "A study of photovoltaic thermal (PVT) hybrid system with computer modeling," Int. J. Smart Grid Clean Energy, vol. 3, no. 1, pp. 75–79, 2014.

[18] A. Sangwongwanich, Y. Yang, and F. Blaabjerg, "High-performance constant power generation in grid-connected PV systems," IEEE Trans. Power Electron., vol. 31, no. 3,
pp. 1822–1825, 2016.

[19] V. Khadkikar and J. L. Kirtley, "Interline Photovoltaic (I-PV) power system — A novel concept of power flow control and management," in 2011 IEEE Power and Energy Society General Meeting, 2011.

[20] I. A. Odigwe, O. O. Ologun, O. A. Olatokun, A. A. Awelewa, A. F. Agbetuyi, and I. A. Samuel, "A microcontroller-based active solar water heating system for domestic applications," Int. J. Renew. Energy Res, vol. 3, pp. 838–845, 2013.

[21] B. Yildiz et al., "Analysis of electricity consumption and thermal storage of domestic electric water heating systems to utilize excess PV generation," Energy (Oxf.), vol. 235,
no. 121325, p. 121325, 2021.

[22] M. B. Kahsay and J. Lauwaert, "Excess energy from PV-battery system installations: A case of rural health center in Tigray, Ethiopia," Energies, vol. 15, no. 12, p. 4355, 2022.

[23] B. A. Hayo, H. H. Al-Kayiem, and S. I. Gian, "Design methodology for PV-battery systems with surplus power utilization for water pumping in rural areas," J. Renew. Energy, 2021.

[24] T. Esram and P. L. Chapman, "Comparison of photovoltaic array maximum power point tracking techniques," IEEE Trans. Energy Convers., vol. 22, no. 2, pp. 439–449, 2007.

[25] B. A. Hayo et al., "Parabolic dish solar geysers for hot water production: Economic viability and performance analysis," Renew. Energy J., 2021