Technical Analysis of Customer-Based and Grid-Topology-Aware Load Shifting in an Industrial Zone

Celal Ugurluyol
Institute of Science
Karamanoglu Mehmetbey University
Karaman, Turkiye
celalugurluyol@gmail.com

Umit Cetinkaya
Turkish Electricity Transmission Corporation
Ankara, Turkiye
u.cetinkaya28@gmail.com

Seda Kul
Electrical and Electronics Engineering
Karamanoglu Mehmetbey University
Karaman, Turkiye
sedakul@kmu.edu.tr

Ramazan Bayindir
Electrical and Electronics Engineering
Faculty of Technology
Gazi University
Ankara, Turkiye
bayindir@gazi.edu.tr

***Abstract*—Increasing photovoltaic (PV) generation and prosumer participation in industrial zones significantly change the direction of power flow and the loading characteristics of distribution grids. This study analyzes the technical effects of grid-topology-aware load shifting in the 16-node distribution grid of the Karaman Industrial Zone (IZ) by using 2025 hourly advanced metering infrastructure (AMI) data and load-flow simulations. A rule-based shifting procedure was applied to 109 prosumers and 208 consumers over seven representative days covering summer, season, and winter periods. At connection points, when reverse power flow occurs under the reference condition, load shifting completely eliminates it. As a result, prosumer peak loads were reduced by approximately 20%, while grid line loadings improved by 4–8%. The seasonal analyses indicate that load-shifting performance depends on the level of PV generation. In the summer period, when PV generation is high, shifting loads to daytime hours improved the local generation-consumption balance, reduced reverse power flow, and decreased peak loads. In contrast, under winter conditions with low PV generation, the same load-shifting approach did not always yield positive results; in some hours, concentrating shifted loads into specific time intervals created new peak loads. Therefore, load-shifting strategies to be implemented in industrial zones should not be based on fixed rules but instead be adapted to season, PV generation levels, and grid topology.**

***Index Terms*—Load Shifting, Prosumer Integration, Industrial Zone, Grid Topology, Distributed Energy Resources**

I. Introduction

The rapid integration of renewable energy resources into distribution systems is fundamentally transforming the conventional understanding of unidirectional power flow. With the widespread deployment of PV systems, industrial users that were previously passive consumers are increasingly becoming prosumers; this transformation introduces technical challenges such as reverse power flow, voltage fluctuations, and line-loading imbalances. In this context, flexible energy management strategies that simultaneously coordinate generation and consumption have become a key requirement for smart grids [1]. Recent studies of real distribution networks have demonstrated the effectiveness of user-driven and algorithmic load-shifting approaches in prosumer communities for peak-load reduction and PV self-consumption [2].

Among flexible load management strategies, load shifting increases grid flexibility and reduces stress on distribution infrastructure by redirecting electricity demand toward periods of high renewable generation. Industrial-scale studies show that renewable-based load-shifting strategies reduce operating costs, improve energy-economic-environmental performance, and decrease the need for installed capacity [3]. When approaches that consider distribution-system topology as a constraint are examined, it is observed that load-shifting methods that directly incorporate local topology constraints into the optimization formulation provide significant improvements in peak-load flattening and self-consumption ratio [4]. Similarly, prosumer flexibility has been shown to have considerable potential to mitigate line loading and reverse power flow problems in distribution grids. In particular, coordinated control of PV generation, flexible loads, and distributed energy resources has been reported to reduce grid congestion and improve distribution system performance [5]. The critical role of planning prosumer resources in coordination with the distribution system topology for preventing grid congestion has also been demonstrated through iterative approaches based on distribution locational marginal pricing [6].

The industrial sector, with its high and dense energy demand, is one of the areas where topology-constrained local energy management strategies offer the greatest potential. The industrial sector, which accounts for approximately 40% of global electricity consumption, is a critical target for demand response (DR) applications [7]. It has been shown that effective utilization of DR potential in industrial parks through

a two-stage centralized energy scheduling method reduces energy costs and increases the utilization rate of renewable energy [8]. Regarding the simultaneous scheduling of industrial loads and PV generation, robust planning frameworks have been developed that account for PV uncertainties and dynamic carbon-emission factors while modeling feedback effects on the distribution system [9]. Similarly, it has been shown that DR strategies that jointly consider industrial loads and energy storage systems can significantly reduce line-loading problems in systems with high renewable penetration [10]. The role of integrated DR approaches in industrial parks in managing multi-party energy balances has been extensively examined in the literature; it has been emphasized that generation-consumption coordination in industrial distribution systems should be addressed alongside distribution-network constraints [11]. Across Europe, industrial DR has been found to provide energy flexibility; however, this potential has not yet been fully exploited due to existing regulatory, digital, and market-integration challenges [7].

Pricing mechanisms are among the key factors determining the effectiveness of DR strategies. Recent research based on 2021–2024 market data and extensive stakeholder interviews has shown that dynamic pricing models encourage consumers to adjust their consumption times in response to price signals and to shift loads to lower-cost time periods [12]. The joint optimization of load shifting and microgrid integration has also been documented in the literature as creating significant stacked economic value and providing noticeable reductions in energy costs [13]. Systematic reviews evaluating demand-side management (DSM) models at a broad scale reveal that factors such as insufficient technical infrastructure and limited consumer participation make it difficult to implement these models effectively in real systems [14].

Studies conducted in Türkiye show that real-time pricing applications have the potential to reduce electricity bills for industrial consumers [15]. In the existing literature, studies evaluating the technical impacts of load-shifting applications on distribution grids using real industrial-zone measurement data, along with grid topology and seasonal generation conditions, remain limited. A significant portion of existing studies focuses on synthetic load profiles, general DR models, or economic benefit analyses; real field data, prosumer–consumer separation, and distribution-grid topology are not addressed together.

To address this gap, this study examines the seasonal technical impacts of a grid-topology-aware load-shifting approach on the distribution grid of the Karaman IZ, using real 2025 hourly AMI measurements. Prosumer and consumer profiles were disaggregated across a 16-node grid model, and the resulting effects on voltage profiles, line loadings, and reverse power flow were evaluated through load-flow simulations.

II. Materials and Methods

A. Dataset and Grid Model

This study examines the electrical distribution grid of the Karaman IZ. The grid includes a total of 317 electricity subscribers, of which 109 are prosumers and 208 are consumers only. The electrical distribution grid of Karaman IZ was modeled in DIgSILENT PowerFactory as a 16-node radial topology connected to the transmission grid. The single-line diagram of the grid is shown in Fig. 1. The labels in the diagram identify the grid's structural components and analysis points. In the model, HV_Bus represents the high-voltage connection point, whereas MV_Bus represents the main medium-voltage distribution busbar. Components coded with the letter Bus in the grid topology (Bus1–Bus11) represent the sub-distribution busbars through which power flows. The elements labeled G (G1–G16) represent the load/generation points where the prosumer and consumer profiles examined in this study are equivalently modeled in the system. The nodes were determined by considering prosumer density, consumption magnitude, and location within the grid to reflect the overall system behavior; the grid model was developed in accordance with the actual distribution system structure to improve analysis accuracy. As a result of the analyses, voltage profiles, line-loading ratios, and power-flow variations were obtained numerically.

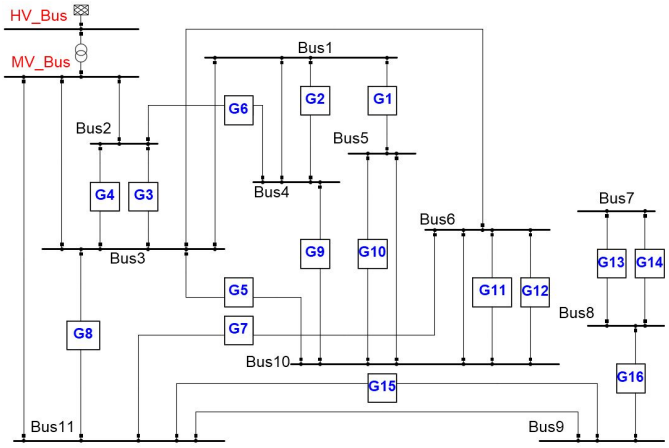

Fig. 1. Single-line diagram of the 16-node electrical distribution grid of the Karaman IZ.

B. Grid-Topology-Aware Load-Shifting Method

The load-shifting approach applied in this study is based on a data-driven procedure that is sensitive to grid topology, hourly PV generation, and seasonal conditions. In this context, subscribers were categorized as prosumers or consumers using 2025 hourly AMI data from the Karaman IZ; generation and consumption profiles were separated based on each subscriber's hourly net power. The resulting data were integrated into a 16-node distribution-grid model to represent the overall behavior of the system.

After the flexible load components of each node were determined, they were redistributed at adaptive rates on an hourly basis, up to a maximum of 20%, based on the instantaneous generation-consumption balance of the system. Food production facilities, cold-storage facilities, and water-pumping systems, which are prominent in the sectoral structure of the Karaman IZ, are well-suited to this shift due to

TABLE I
INTEGRATED COMPARISON OF CONSUMER AND PROSUMER LOAD CHARACTERISTICS

Node	Consumer Peak Load (MW) [Ref. vs. Shift]	Prosumer Peak Load (MW) [Ref. vs. Shift]	Prosumer Min. Power (MW) [Ref. vs. Shift]	Max Line Loading (%) [Ref. vs. Shift]
G1	3.391 / 2.713	0.022 / 0.023	0.000 / 0.000	25.82 / 23.74
G2	0.035 / 0.037	0.573 / 0.459	0.168 / 0.168	7.49 / 8.50
G3	0.104 / 0.124	2.283 / 1.826	1.019 / 1.019	10.43 / 10.05
G4	0.001 / 0.001	0.598 / 0.644	0.000 / 0.000	0.88 / 0.88
G5	1.883 / 1.883	0.759 / 0.607	0.080 / 0.080	7.82 / 7.69
G6	0.061 / 0.062	0.329 / 0.354	0.000 / 0.000	1.86 / 3.61
G7	3.264 / 3.790	2.277 / 1.821	-0.364 / 0.069	0.57 / 0.57
G8	0.029 / 0.026	1.504 / 1.624	0.386 / 0.386	3.05 / 2.99
G9	0.098 / 0.078	0.740 / 0.653	0.000 / 0.000	1.60 / 1.67
G10	0.423 / 0.425	1.989 / 2.056	0.307 / 0.245	22.25 / 17.88
G11	0.002 / 0.002	0.215 / 0.172	0.017 / 0.017	31.42 / 25.23
G12	0.068 / 0.068	0.184 / 0.184	0.013 / 0.013	5.89 / 4.75
G13	0.011 / 0.011	0.378 / 0.378	0.068 / 0.068	8.80 / 9.11
G14	0.030 / 0.030	0.206 / 0.227	0.003 / 0.003	3.98 / 3.19
G15	0.008 / 0.008	1.877 / 1.502	0.122 / 0.122	5.66 / 4.85
G16	0.019 / 0.019	0.108 / 0.119	0.000 / 0.000	11.07 / 9.62

their thermal inertia and storage capacity, without interrupting production continuity. The 20% upper limit was determined by jointly considering technical applicability and the Karaman IZ's sectoral load structure.

III. RESULTS AND DISCUSSION

The comparative results for the 16 nodes presented in Table I show that the load-shifting application does not produce the same effect at all nodes; the impact varies depending on the prosumer/consumer structure of the node, PV generation level, and location within the grid. In Table I, the first values represent the reference condition, while the second values represent the post-shifting condition. While peak-load values generally decreased at prosumer-dominated nodes, limited increases in peak load occurred at some consumer-dominated nodes, as loads were shifted to hours with high PV generation. This indicates that load shifting should not be evaluated merely as a total load-reduction measure, but also as a tool that improves generation-consumption timing and regulates the local energy balance. Especially at prosumer nodes with significant PV generation, changes in minimum power values provide important technical indicators for reducing or eliminating reverse power flow.

In terms of critical line loadings, the maximum line-loading ratio at node G11 decreased from 31.42% under the reference condition to 25.23% after shifting, while at node G10 it decreased from 22.25% to 17.88%. It was verified that line-loading values remained within safe operating limits in all scenarios. Node G7 was selected for the detailed case analysis. G7 is the only node among the 16 nodes to record a negative minimum power value (-0.364 MW); this numerically confirms that reverse power flow occurred at this node during hours when generation exceeded consumption. The G7 represents the node where the impacts of PV generation integration and demand flexibility on the grid are most clearly observed. At this node, which has a high peak demand of 3.264 MW in the consumer condition, the peak power value in the prosumer reference condition is 2.277 MW.

Fig. 2 presents a comparison of the G7 prosumer load profile under the reference condition and after a 20% load shift. It was determined that consumption values decreased by approximately 18–22% during the nighttime hours (00:00–06:00), whereas consumption increased significantly during the mid-

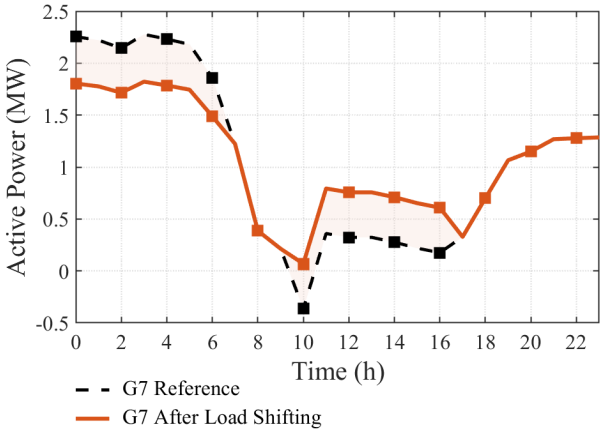

Fig. 2. Prosumer load profile of the G7 node (06.07.2025).

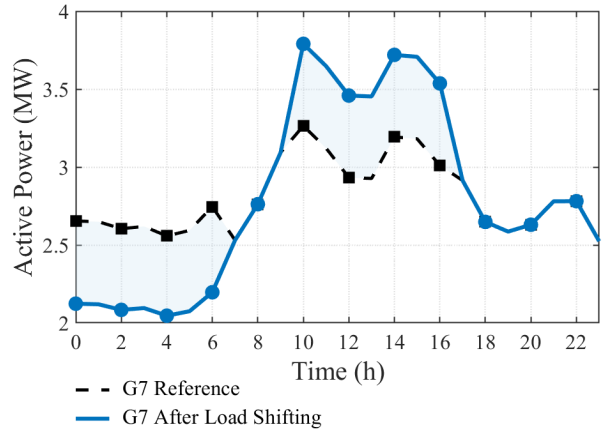

Fig. 3. Consumer load profile of the G7 node (06.07.2025).

day hours (10:00–16:00). The minimum power value, which decreased to -0.36 MW under the reference condition, increased to +0.07 MW after load shifting. This change clearly demonstrates that the reverse power flow in the system was eliminated. The maximum load, which was 2.27 MW under the reference condition, decreased to 1.82 MW after shifting, corresponding to an approximate reduction of 20%.

Fig. 3 shows the consumer load profile of the G7 node before and after shifting. Consumption, which was in the range of 2.6–2.65 MW during nighttime hours, decreased to the 2.05–2.15 MW band after shifting. During midday hours, consumption increased from 3.1–3.2 MW under the reference condition to the range of 3.6–3.8 MW after shifting. An increase of approximately 18–20% in peak load is observed on the consumer side. However, when this increase is evaluated alongside the findings from the prosumer analysis, it becomes clear that the increased consumption coincides with high PV generation and improves the overall energy balance of the system. Therefore, the increase in peak load on the consumer side should not be considered a negative outcome in itself; rather, it should be evaluated in the context of the generation-

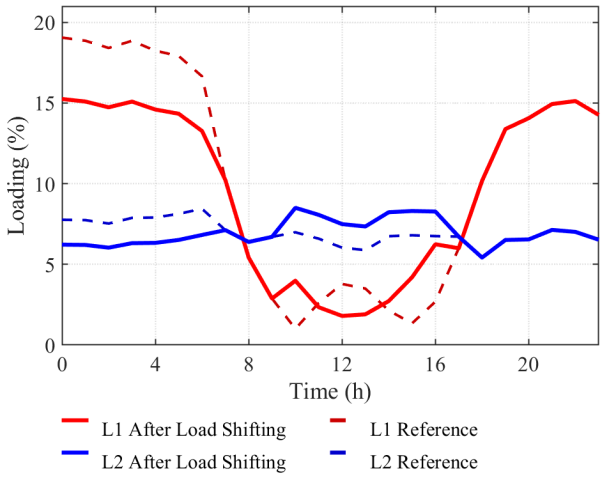

Fig. 4. Loading ratios of Line 1 and Line 2.

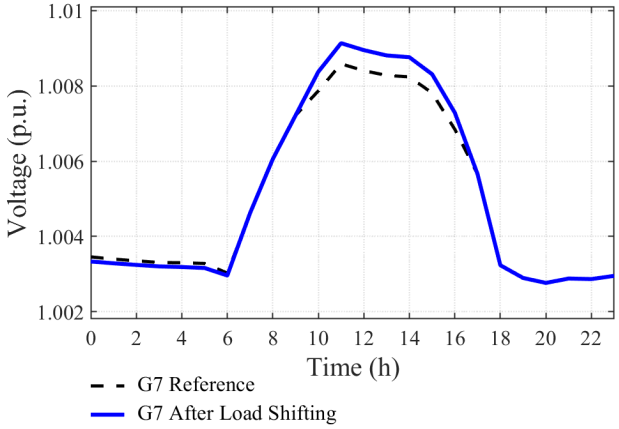

Fig. 5. Voltage-profile comparison of the G7 node (p.u.).

consumption balance. The role of integrated DR approaches in industrial parks in managing such multi-party balances has been extensively addressed in the literature. [11].

Fig. 4 presents a comparison of the loading ratios for Lines 1 and 2 connected to the G7 node. In Line 1, the loading level, which was approximately 18–19% during nighttime hours, decreased to 14–15% after shifting. The maximum loading value decreased from approximately 19% to 15%, indicating an overall load-reducing effect on Line 1. In Line 2, while loading decreased during nighttime hours, it increased from 6–7% to 7.5–8.5% during midday hours. However, the maximum loading values remained low, and no overloading occurred. It was determined that the load-shifting application produced different effects line-by-line; nevertheless, the loading ratios for all lines remained well below the critical limit values.

Fig. 5 compares the voltage profiles of the G7 node before and after shifting. The voltage values remained within the range of 1.0028–1.0091 p.u. throughout the day. After shifting, especially during the 10:00–16:00 interval when PV generation was intensive, a regular and limited increase in voltage levels was observed due to the improvement in the local generation-consumption balance; the most pronounced difference was recorded at approximately 11:00. It was determined that the negligible changes during nighttime hours did not pose any risk in terms of system operation. The load-shifting application did not adversely affect the voltage profile at the G7 node; rather, it contributed to grid operational stability by balancing daytime voltage levels.

Table II presents the comparative results of the 20% load-shifting scenario applied at the G7 node for seven different representative days. On 06.07.2025, 04.07.2025, and 10.08.2025, which represent the summer period, the maximum load values on the prosumer side decreased by 19.8%, 26.8%, and 20.0%, respectively. The increases in minimum power on these days (+0.43 MW on 06.07.2025 and +0.38 MW on 04.07.2025) indicate that reverse power flow was reduced or eliminated.

On the consumer side, maximum load values increased on six of the seven representative days, ranging from 6.8% to 19.0%, whereas a 20.0% decrease was observed on 06.06.2025. In particular, increases of 20–35% in average load values during midday hours clearly indicate that the load-shifting strategy was directed toward time intervals with high PV generation. In terms of line loadings, maximum loading values on Line 1 generally decreased by 3–5%, while limited increases in the range of 0.5–2% occurred on Line 2. This finding is consistent with studies indicating that grid-topology-aware load shifting balances line-load distribution by reducing peak consumption.

A different pattern emerges for the season and winter periods. On 31.03.2025 and 10.12.2025, peak-load increases were observed on the prosumer side. In particular, on 10.12.2025, peak-load increases of 15.3% and 17.1% occurred on the prosumer and consumer sides, respectively; the minimum power decreased by 0.46 MW, indicating that the reverse power flow worsened. This result shows that under low PV generation conditions, load-shifting applications may create new peak loads. This determining effect of seasonally varying PV generation conditions on load-shifting performance has also been observed and reported in prosumer systems.

When the findings are evaluated as a whole, it is seen that the technical success of the grid-topology-aware load-shifting approach is directly related to the level of renewable generation. While grid performance improved significantly during the summer period with high PV generation, the effect remained limited or even produced adverse results under low-generation conditions. This result demonstrates that load-shifting strategies should not be designed as a fixed approach, but rather in a manner sensitive to the generation profile and seasonal conditions.

IV. Conclusion

In this study, the technical effects of a grid-topology-aware load-shifting scenario on a 16-node distribution grid were investigated through load-flow analyses in DIgSILENT PowerFactory using real 2025 AMI measurement data from the Karaman IZ. On days during the summer period, it

TABLE II
SEVEN-DAY COMPARISON OF LOAD-SHIFTING EFFECTS AT THE G7 NODE

Date	Period	Prosumer Change (%)	Consumer Change (%)	Min. Power Change (MW)	L1 Change (%)	L2 Change (%)
06.07.2025	Summer	19.8 decrease	18.5 increase	0.43 increase	4.0 decrease	0.6 increase
04.07.2025	Summer	26.8 decrease	18.8 increase	0.38 increase	3.0 decrease	1.3 increase
06.06.2025	Season	≈ 0	20.0 decrease	0.04 increase	1.0 increase	≈ 0
09.06.2025	Season	2.7 increase	18.2 increase	0.03 increase	≈ 0	1.1 increase
10.08.2025	Summer	20.0 decrease	19.0 increase	≈ 0	3.7 decrease	1.2 increase
31.03.2025	Season	2.8 increase	6.8 increase	0.009 decrease	≈ 0	1.0 increase
10.12.2025	Winter	15.3 increase	17.1 increase	0.46 decrease	5.5 increase	2.0 increase

was determined that maximum load values on the prosumer side decreased by approximately 20–27%, and that reverse power flow was significantly reduced or eliminated due to the increase in minimum power values. On the consumer side, although peak increases were observed as loads shifted to midday, the overall generation-consumption alignment of the system improved because these increases coincided with high PV generation. In terms of line loadings, loading decreased on Line 1 and limited increases were observed on Line 2; however, all values remained within operating limits.

Furthermore, the analyses showed that the success of the load-shifting application also depends on the level of renewable energy generation. During the season and winter periods, especially under low PV generation conditions, new peak-load formations were observed on the prosumer side, and the level of improvement remained limited. In this context, by analyzing the effects of a load-shifting scenario developed through prosumer/consumer separation based on real AMI data on grid voltage profiles, line-loading ratios, and reverse power flow over days representing different seasonal conditions, this study quantitatively demonstrates its dependence on PV generation.

Consequently, the grid-topology-aware load-shifting approach, implemented in conjunction with prosumer–consumer aggregation, is expected to increase grid flexibility in industrial zones, reduce stress on the distribution infrastructure, and improve system performance by promoting on-site consumption of renewable energy resources. Based on real field data, this study demonstrates the technical applicability of load-shifting strategies in industrial distribution systems and provides a starting point for future studies that incorporate real-time pricing, varying load-shifting ratios, and season-aware optimization methods.

ACKNOWLEDGMENT

The authors would like to thank the Board of Directors of the Karaman Organized Industrial Zone for enabling the use of electricity generation and consumption data in this study.

REFERENCES

[1] M. R. Khan, Z. M. Haider, F. H. Malik, F. M. Almasoudi, K. S. S. Alatawi, and M. S. Bhutta, "A comprehensive review of microgrid energy management strategies considering electric vehicles, energy storage systems, and ai techniques," *Processes*, vol. 12, no. 2, 2024.

[2] A. Rollo, P. Serafini, F. Aleotti, D. Cilio, E. Morandini, D. Moneta, M. Rossi, M. Zulianello, and V. Angelucci, "Load shifting and demand-side management in renewable energy communities: Simulations of different technological configurations," *Energies*, vol. 18, no. 4, 2025.

[3] L. Silvestri and M. De Santis, "Renewable-based load shifting system for demand response to enhance energy-economic-environmental performance of industrial enterprises," *Applied Energy*, vol. 358, p. 122562, 2024.

[4] D. G. Kyriakou, F. D. Kanellos, G. J. Tsekouras, and K. A. Moungos, "Effective and local constraint-aware load shifting for microgrid-based energy communities," *Energies*, vol. 18, no. 2, 2025.

[5] D. Tomaselli, D. Most, E. Sinani, P. Stursberg, H. J. Heger, and S. Niessen, "Leveraging prosumer flexibility to mitigate grid congestion in future power distribution grids," *Energies*, vol. 17, no. 17, 2024.

[6] H. Ye, P. Zhao, Y. Zhang, R. Zhang, S. Wen, M. Zhu, and Z. Y. Dong, "Multi-energy sharing framework and coordinated operation technologies in integrated energy systems: A review," *IET Smart Grid*, vol. 8, no. 1, p. e70047, 2025.

[7] M. Ranaboldo, M. Aragüés-Peñalba, E. Arica, A. Bade, E. Bullich-Massagué, A. Burgio, C. Caccamo, A. Caprara, D. Cimmino, B. Domenech, I. Donoso, G. Fragapane, P. G.-F. de Rubinat, E. Jahnke, M. Juanpera, E. Manafi, J. Rövekamp, and R. Tani, "A comprehensive overview of industrial demand response status in europe," *Renewable and Sustainable Energy Reviews*, vol. 203, p. 114797, 2024.

[8] C. Liu, X. Xu, W. Xu, J. Liu, and Y. Liu, "A two-stage centralized energy scheduling by mining demand response potential in a renewable energy-based industrial park," *Energy Reports*, vol. 12, pp. 4813–4829, 2024.

[9] J. Hong, L. Zhang, Z. Hu, W. Lin, and Y. Zou, "A robust system model for the photovoltaic in industrial parks considering photovoltaic uncertainties and low-carbon demand response," *Frontiers in Energy Research*, vol. Volume 12 - 2024, 2024.

[10] C. Tian, J. Li, C. Wang, L. Lin, and Y. Yan, "Demand response strategy considering industrial loads and energy storage with high proportion of wind-power integration," *Sensors*, vol. 24, no. 22, 2024.

[11] Z. Chen, Y. Sun, X. Ai, S. Malik, and L. Yang, "Integrated demand response characteristics of industrial park: A review," *Journal of Modern Power Systems and Clean Energy*, vol. 8, 10 2019.

[12] S. Numminen, M. Jalas, S. Ruggiero, and A. Värä, "Shifting toward dynamic pricing of electricity: What did we learn from the 2021–2024 energy crises?" *Smart Energy*, vol. 20, p. 100210, 2025.

[13] A. Garcesa, N. G. Johnson, and J. Nelson, "Evaluating the stacked economic value of load shifting and microgrid control," *Buildings*, vol. 15, no. 13, 2025.

[14] U. U. Rehman, "A comprehensive systematic literature review of demand-side-management models in smart grids: trends, gaps, and future directions," *Energy Systems*, pp. 1–49, 03 2026.

[15] N. Beşli and Y. Dağtekin, "Implementation of real time pricing program on industrial consumers," *Harran University Journal of Engineering*, vol. 5, no. 1, p. 21–31, 2020.