Analysis and Design of a Green Hydrogen Energy Storage Microgrid for Residential Applications

Adrian-Augustin POP
Dept.of Electrical Machines and Drives
Technical University of Cluj-Napoca
Cluj-Napoca, Romania
augustin.pop@emd.utcluj.ro

Ferencz HAVADI
Dept.of Electrical Machines and Drives
Technical University of Cluj-Napoca
Cluj-Napoca, Romania
Havadi.Fe.Ferencz@student.utcluj.ro

Roland POLICSEK
Dept.of Electrical Machines and Drives
Technical University of Cluj-Napoca
Cluj-Napoca, Romania
Policsek.Ro.Roland@student.utcluj.ro

Abstract— This paper presents the technical design and phased implementation of residential hydrogen production and utilization microgrid. The current research focuses on the physical realization of a localized hydrogen generation unit using a 6-cell electrolyzer stack, paired with an independently developed electromechanical drive train controlled via MATLAB/Simulink. While the long-term objective involves a full energy-to-power cycle to enhance solar panel efficiency, current hardware procurement delays—specifically the transit of the primary fuel cell—necessitate a decoupled testing approach. The system currently evaluates the 96 W electrolysis generation phase and the Permanent Magnet Synchronous Motor (PMSM) load dynamics separately. This study outlines the foundational physical architecture, the established control algorithms, and the theoretical integration framework required to achieve full system automation in the subsequent project phase.

Keywords— hydrogen systems; smart microgrids; mechatronics, control systems; embedded energy systems.

I. INTRODUCTION

The transition toward sustainable energy systems has positioned green hydrogen as a critical vector for long-term energy storage [3], [10] particularly in balancing the intermittent nature of photovoltaic (PV) generation. In the current Romanian energy landscape, prosumers face significant challenges due to the gap between peak production during the day and high consumption during the evening, often leading to inefficient energy exports to the grid [1]. The storage system is considered the "heart" of such applications, requiring high reliability and rigorous testing. Building a highly reliable, physically robust, and heavily monitored framework is imperative before closing the loop with energy recovery mechanisms. The integration of monitoring, control, and adaptive load management plays a crucial role in ensuring safe and predictable operation, especially when interfacing with variable renewable sources [2]. Furthermore, experimental validation and iterative design refinement are essential steps toward bridging the gap between laboratory prototypes and deployable real-world systems, ultimately enabling efficient energy ecosystems.

II. METHODOLOGY

A storage and production system based on green hydrogen is composed of several specialized components, each playing a critical role in ensuring the safe and efficient operation of the energy cycle. Our main goal was to build a complete system to study energy conversion “power to power” and evaluate the results at every step of the process. Below is a detailed description of the main units involved in producing hydrogen gas using water electrolysis, storing and pressurizing the generated gas and supplying a fuel cell capable of extracting electrical energy [3]. The total amount of electrical energy is stored in battery storage pack and used by a special electric machine assembly as our main load in this circle ensuring optimized local energy balancing loops [4]. The process applies multidisciplinary methods to design and build an integrated hardware system that enables the study of energy conversion and the evaluation of hydrogen as an efficient alternative energy source.

Key components of the architecture

The core elements of the hydrogen production unit are the electrolyzer modules, which utilize electrical energy to generate chemical storage. In this application, a stack of six Membrane Electrode Assembly (MEA) units [3], [10] is employed. Each unit utilizes a polymer electrolyte membrane with a thickness of 50 micrometers and can produce 3.9 L/h at a nominal current of 4A and 4V. Depending on the specific technology used, the system outputs the gases at a pressure of 20 mbar with the current hydrogen generation process [10].

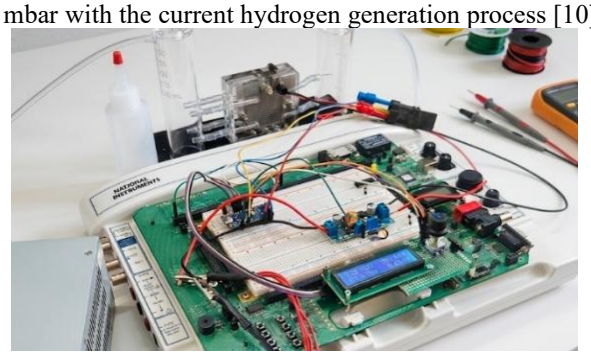

Fig. 1. Experimental setup for Membrane Electrode Hydrogen Generator evaluation and characteristics

The next essential element for the automation of the system is the electrical energy storage paired with a digital control unit, which serves a similar role to a Battery Management System (BMS). This section of the hardware ensures that the generated energy is stored to facilitate its later availability. This exact version utilizes industry standard Li-Ion technology battery cells available on the market, and its standardized nature and long-lasting phase of implementation ensures reliable and safe operating conditions across a wide range of applications. This exact format, known as Li-Ion 18650 [5], offers 3.7 V and close to 14 Wh of energy capacity and an expected life of roughly 3000 cycles. Considering our power and energy generation, several of these cells configured as battery packs will ensure that the energy pipeline will satisfy the system’s requirements and serve a long-lasting term and offer a perfect solution for energy storage. An

This work was supported by a grant co-financed by the European Regional Development Fund, within the Smart Growth, Digitization and Financial Instruments Program 2021-2027, as part of project Romanian Hub for Hydrogen and new energy technologies-Ro-HydroHub, contract no G 2025-113330 din 30.09.2025 to G 2024-81692/390006 from 13.11.2024, SMIS code: 351358.

important consideration for using these cells is the requirement of adequately supervising the charging and discharging curves of each cell. For this purpose, the battery pack is equipped with its own management system based on the Battery Management System (BMS) architecture. Using a dedicated control system the battery can be balanced to mitigate the slight imperfections between the battery cell and prolong the life expectancy of each cell it comes with the added benefit of being able to extract information regarding voltages, temperatures and other important details in real time facilitating its embedding into a large control loop with real time feedback across the entire hardware setup described in this article. As shown on Fig. 2, the final version of energy storage incorporates up to 16 Li-Ion cells offering a total capacity of 224Wh with the added benefit of offering several daisy-chaining options to further increase its practicality and energy requirements.



Fig. 2. Energy storage system implementation paired with control and management circuit

Our in-house designed printed circuit boards facilitate the full current handling capability of the implied battery cells and serves crucial role in collecting voltage, current and temperature measurement with accurate and reliable precision to achieve high fidelity on the control side. The presented solution fits perfectly and satisfies all requirements imposed by the generation characteristics of the setup.

Another important section is the centralized power distribution module that is responsible for monitoring operational parameters such as current, water levels, and air pressure via a special low-cost automotive grade pressure sensor suite. Its main role is to maintain the system within maximum safety conditions, including the ability to stop production completely if deviations are detected. The shutdown is achieved by disconnecting the power relays, which act as contactors to isolate the modified power supply from the electrolyzer stack. To modulate the generators individually and it is necessary to use a voltage regulation stage. This is realized through digitally controlled hardware-modified Buck converters [8], which step down the voltage to stable levels imposed by the data acquisition system.

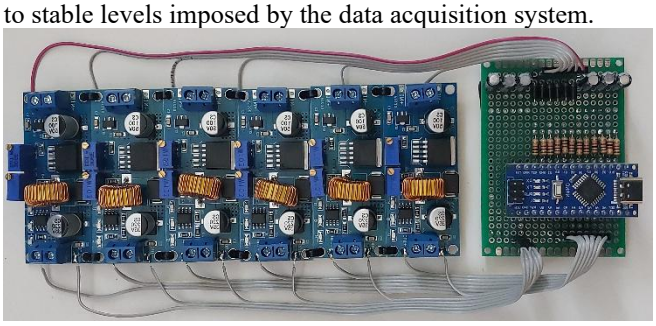

Fig. 3. Voltage and power modulation setup for hidrogen generation

The above-mentioned system is presented in Fig. 3. offers great flexibility on the output side, offering a large usable domain of fine tunable voltage provided by the modified buck feedback circuit and the microcontroller-based control loop. This implementation offers the possibility to tailor specific power levels for the hydrogen generators via software designed feedback control. Using this type of approach the system can simulate various scenarios like photovoltaic power delivery. The incoming voltage is measured, the necessary output voltage is calculated, and the task is executed by manipulating the control circuit of the converters. The entire control algorithm is running MATLAB-Simulink [7] for specific packages installed into the central computing station. This methodology offers great feedback with real time calibration possibilities and troubleshooting protocols while the hardware executes the task in real time.

Finally, a Proton Exchange Membrane Fuel Cell (PEMFC) [3], [11] is planned for energy recovery, capable of producing 30 W at a nominal voltage of 12 V. Due to the pressure differential required by the fuel cell (0.4-0.6 bar), careful pneumatic regulation is necessary to balance the system and ensure optimal energy management [9], [11]. The generated power is treated and charged into the main battery storage, completing a loop thus closing the circuit.

To prepare the system for eventual energy recovery, a localized “Dyno” drive train has been developed independently. This serves as the active electromechanical load that will eventually consume the power generated by the fuel cell. By this measure we successfully created our simulation of a household. The core of this active load is a 3-Phase Inverter composed of a high-power MOSFET bridge driving a Permanent Magnet Synchronous Motor (PMSM). To manage the complex switching states, the control architecture is developed using a Model-Based Design (MBD) approach within the MATLAB/Simulink environment with live data acquisition and specialized tuning or simulation capabilities to represent a large range of loads. Together with the hydrogen generation these interlocking simulation methods help recreating characteristics essential for validating our small-scale household power requirements.

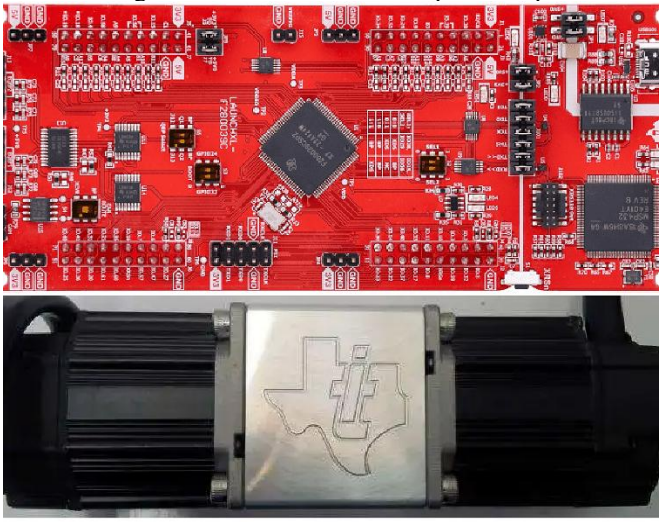

Fig. 4. Dyno assembly consisting of FOC driver and dual motor drivetrain

In order to test our proposed system in the following part of this artice we limit the power output of the entire system to just 200W. The average power demand of a romanian house usually don't exceed 2kW during the day. This specific ratio ensures that we keep our systems in a safe operating area while also offering a modest 1 to 10 conversion ratio for cross referencing all of our results with a full scale household setup.

III. RESULTS AND DISCUSSION

To validate these theoretical equations and predict the dynamic behavior of the generation phase, a comprehensive simulation session was conducted using a modified MATLAB/Simulink electrolyze model [7] (Fig.5).

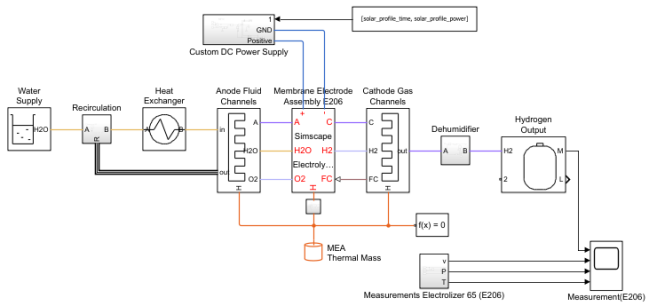

Fig. 5. Hydrogen gas production model with storage tank

Using accurate MATLAB-Simulink models the system can be tailored to suit many applications. The electrolyze unit can be supplied with constant/changing or specially created photovoltaic resemblance energy profile to simulate a large palette of operation environments. The model offers accurate fluid dynamics and thermal management data besides a high-fidelity electrical model. Preliminary simulations showed that the customized topology recreated our specific setup's results under every tested condition with negligible tolerances. The fuel cell also indicated a projected energy recovery rate [9] between 28 W - 30 W and the electrolysis process maintained a constant input power of 96 W during a long 86400 second testing phase representing 24hours worth of testing. Drawing the full nominal current from the modified power supply regulated constantly, the system is designed to utilize a 6-cell stack, which is theoretically capable of generating a hydrogen flow rate of 55 cm^3/min backed up by the manufacturer's data sheet. The results shown in Fig. 6 represents a single module operating for 24 hours straight.

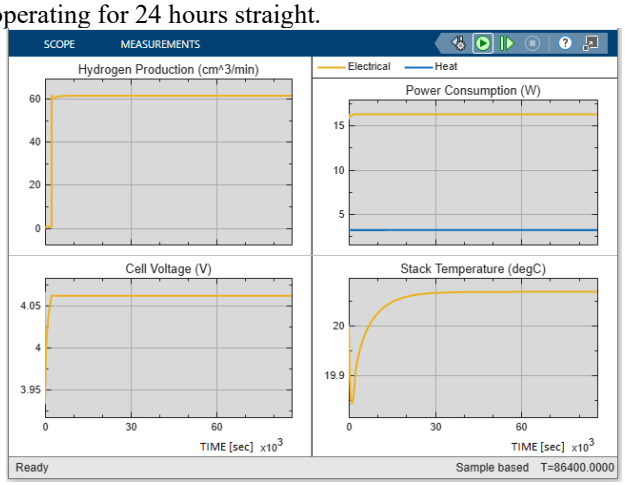

Fig. 6. Hydrogen production yield using single-cell stack

While the model performed exceptionally well transforming electrical energy into chemical energy storage the efficiency of this stage offers a peek into the main attraction of this specific energy storage method especially if we consider that the electricity produced during the day is mostly exported at unfavorable prices by pro-summatory households due to our national energy trading system.

$$Energy\ IN = 16.4\,W * 84600\,s \approx 0.384\,kWh \quad (1)$$

While the internal efficiency of the generator is 81% considering just the wasted heat being 3W the total efficiency is calculated by observing the hydrogen gas's energy reported to the total electrical energy consumed:

$$Energy\ H2 = 0.007 * 120 * 10^6 \approx 0.233\,kWh \quad (2)$$

$$Efficiency = \frac{0.233}{0.384} \approx 0.61\ or\ 61\% \quad (3)$$

Another important consideration omitted so far constitutes to the exact gas storing method used to retain the generated energy until the fuel cell assembly is ready to transform it into usable electric energy. To determine the required storage volume, we conducted additional tests to fully utilize the generation pipeline and gather data for properly sizing the pressure tank. A major bottleneck that limited the proposed system's versatility represented the low pressure on the outlet side of the generators topping out at only 200 mbar or 0.2 Bar. Storing larger gas quantities would require significantly increased volume, reducing the practicality of the method. Moreover, storing highly flammable gases in large amounts raises serious safety concerns for residential use. For this purpose, the next test results will be presented on Fig. 8. offer the maximum amount of gas the system can deliver using all six generators at full power for 24 hours. The 0.33 Liters/min of hydrogen would occupy by the end of the day a total of 475 liters given that the storage remains low pressure. A great alternative to reduce this volume is to store hydrogen under pressure since they share a 1:1 transformation ratio as Boyle's law [5] describes ideal gas behavior. Below is presented the storage options considered at pressures up to 30 Bar and the volume reduction is significant. From 475 liters the necessary volume dropped to just 15.8 L. Also, these pressures keep hydrogen's ideal behavior as an ideal gas, and they are widely used in these kinds of storage methods.

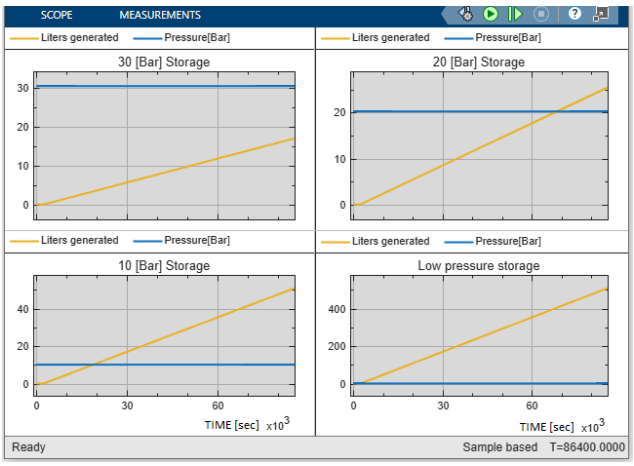

Fig. 7. Hydrogen storage comparison based on volume and pressure

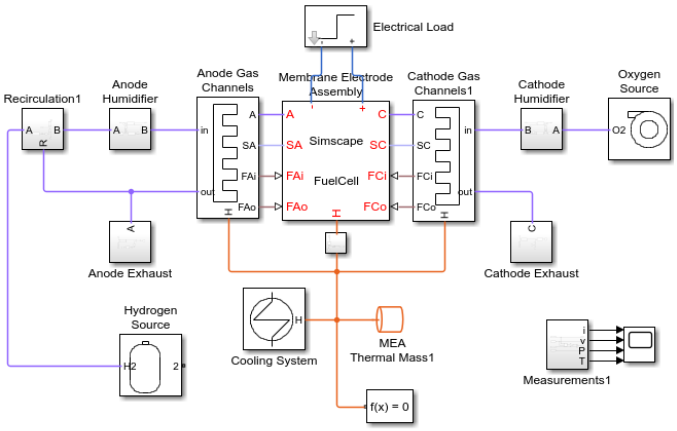

Fig.8. Proton Exchange Membrane Fuel-Cell Model

In our physical setup, the power supply is regulated by PWM-controlled Buck converters. These converters can create pressure ripples, and the tank absorbs these, preventing the system from starving or creating a vacuum that would destabilize the solver. Our results confirm this topology supports a continuous energy recovery of **25-30 W** over **60% efficiency**, with small amounts of the excess heat generated.

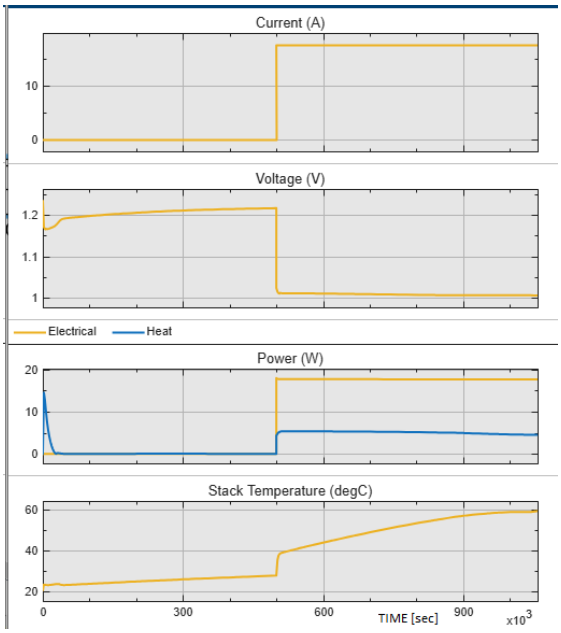

Fig .9. Fuel-Cell Output characteristics

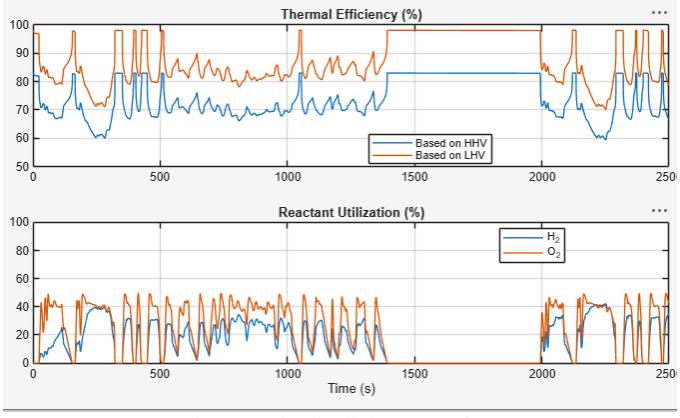

Fig.10. FuelCell Efficiency Graph

Crucially, the simulation models an **active stoichiometric balance** [3]. We do not run the oxygen compressor at a fixed rate; instead, it is governed by an automated feedback loop. This compressor logic continuously monitors the current I and the rate of hydrogen production, scaling the oxygen delivery to match. By pumping the equivalent amount of air into the cathode side, the system maintains a perfect stoichiometric balance [9], preventing reactant starvation and ensuring the fuel cell membrane remains optimally hydrated with sufficient water and working reliably, efficiently [11].

To ensure the model starts up just like the real hardware, we use a "hierarchical initialization" strategy. We anchored the pneumatic network to the buffer tank at **1 Bar** and the temp at **298.15 K**, mimicking the state of our system after a manual purge. This ensures that the moment the simulation starts, the pressure waves and the air-supply feedback loops propagate exactly as they would in the physical stack.

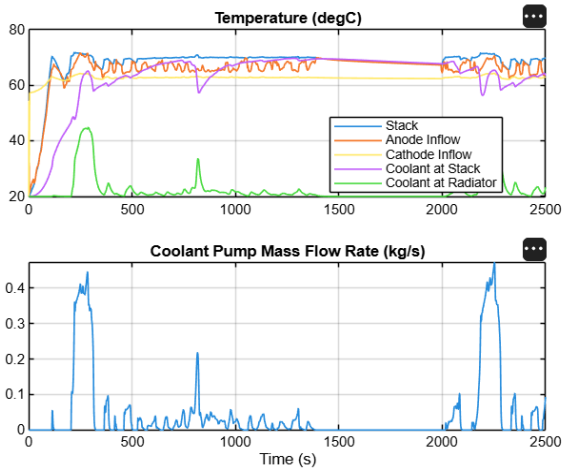

Fig.11. FuelCell system Temperatures and Cooling Pump Rate

In a real PEM system, the electrochemical reaction doesn't just produce hydrogen—it generates water as a byproduct. In our stack, this translates to about **4.3 g/h** [10], [11] of water that needs to be cleared up. If this water just sits there, it floods the gas diffusion layers (GDL) and chokes off the reactant gas, which ruins the cell's efficiency. We modeled this dissipation as a necessary part of the exhaust subsystem. Physically, we use an automated purge routine to vent this water, keeping the membrane surface clean and active. This isn't just about keeping the system dry; it's a key piece of data for our long-term monitoring. By tracking exactly how much water we're purging against the stack's performance, we can see in real-time how the membrane is aging. If we start seeing a climb in ohmic resistance, we'll know it's time to adjust our purge cycles or maintenance intervals to get the longest possible lifespan out of the membranes.

The research emphasizes that handling hydrogen is inherently hazardous; therefore, the implementation of rigorous safety protocols and automated monitoring is not optional but a mechanical necessity for the system's viability. Despite current hardware constraints and equipment lead times, the foundational framework has been established. The gravity-fed electrolysis column operates efficiently at 96 W, and the MATLAB-driven PMSM control algorithms have been successfully modeled. The project is strategically positioned for the final phase: installing the fuel cell,

balancing the pressure differential through 25% load capping, and transitioning into a unified, MATLAB-controlled automated microgrid ecosystem. By continuously logging high-fidelity operational data, the MATLAB environment will be utilized to model the membrane degradation and aging phases. Tracking metrics such as irreversible voltage decay and increasing ohmic resistance over time will allow researchers to predict the end-of-life (E o L) phase of the membranes and establish the optimal working hours and duty cycles to maximize the product's operational lifespan.

IV. Conclusions

This paper presented the analysis, design, and staged implementation of a residential green hydrogen microgrid intended for renewable energy storage and localized energy recovery applications. The proposed architecture combines hydrogen generation, embedded converter-level regulation, MATLAB/Simulink-based supervisory automation, and electromechanical load integration within a unified experimental framework. The research demonstrated the feasibility of a decentralized electrolysis control topology utilizing six independently regulated buck converter modules controlled through an Arduino-based real-time MATLAB/Simulink environment. Unlike conventional centralized electrolyzer supply systems, the proposed approach enables individual voltage regulation for each electrolysis cell, allowing improved operational flexibility, enhanced fault isolation capability, and future adaptive efficiency optimization. The implemented control architecture integrates telemetry acquisition, PWM-based converter regulation, state-machine supervisory logic, and hardware-level emergency shutdown protection mechanisms.

The system continuously monitors operational parameters including voltage, current, pressure, and water level conditions to maintain safe hydrogen production boundaries. The physical hydrogen generation platform was dimensioned for a nominal electrolysis power of 96 W, and a theoretical hydrogen production capacity of approximately 23.8 L/h. Simulated fuel-cell recovery analyses indicate a projected electrical recovery capability between 25 W and 35 W, corresponding to an estimated round-trip system efficiency between 26% and 31%. Additionally, the work establishes the foundational infrastructure required for future advanced automation strategies, including predictive membrane degradation monitoring, adaptive converter balancing, and centralized microgrid optimization using MATLAB-based supervisory analytics.

V. FUTURE WORK

The ultimate objective of this project is to transition the hydrogen microgrid from an isolated testbench into afully integrated residential energy ecosystem. The immediate next phase of research will focus on directly coupling the electrolyzer stack with photovoltaic (PV) [1], [4] solar panels to capture surplus renewable energy. Currently, prosumers deal with a major energy mismatch: solar panels generate their peak power during the day when household consumption is typically low. This gap often leads to inefficient energy exports back to the national grid. Our proposed architecture solves this by redirecting that leftover, surplus current directly into the 6-cell electrolyzer. Instead of wasting the unconsumed energy or selling it at a loss, the system uses it to drive the electrolysis process and generate hydrogen gas. This stored hydrogen acts as a zero-degradation chemical battery for the night. When solar production drops, the PEM fuel cell [3], [9] will consume the stored gas to generate electricity, actively reducing the household's reliance on the national grid. A primary focus of our upcoming field tests will be to physically validate the simulated round-trip efficiency [3], [9] of this energy-to-hydrogen-to-power cycle, which is currently projected between 26% and 31% [10], [11]. We aim to quantify exactly how much grid power is offset by this recovery loop and evaluate how this modular architecture could be scaled up from individual households to larger industrial facilities. Finally, future iterations will investigate the system's viability for long-term, seasonal energy storage [3]. Unlike traditional lithium-ion battery banks that suffer from self-discharge, compressed hydrogen allows us to capture high-yield surplus solar energy during the summer months and store it indefinitely. This creates a strategic energy reserve that can be tapped during the winter months when solar irradiation is low, providing a realistic pathway toward true, year-round grid independence. The system illustrates the entire "power-to-power" cycle Fig.12.

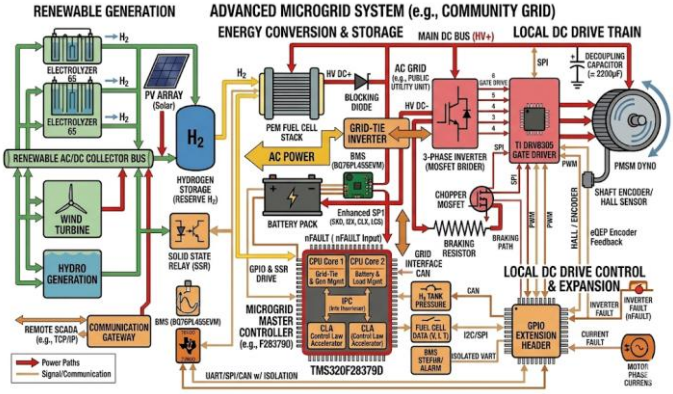

Fig.12. Complete structural schematic of the hybrid green hydrogen energy conversion and storage framework.

V. References

[1] M. Colak and S. Balci, "Intelligent techniques to connect renewable energy sources to the grid: A review," 2021 9th International Conference on Smart Grid (icSmartGrid), 2021, pp. 179-185.

[2] F. Heider, M. Plenz, and D. Schulz, "Smart grid power management interface for use of short-term flexibility," 2021 9th International Conference on Smart Grid (icSmartGrid), 2021, pp. 82-91.

[3] A. Abudureyimu, "A comprehensive review of green hydrogen technology: Electrolysis methods, topologies and control strategies, applications," International Journal of Hydrogen Energy, vol. 52, no. A, 2024, pp. 312-331.

[4] P. Arévalo, D. Ochoa-Correa, and E. Villa-Ávila, "Systematic review of the effective integration of storage systems and electric vehicles in microgrid networks: Innovative approaches for energy management," Vehicles, vol. 6, no. 4, 2024, pp. 2075-2105.

[5] Vădan, I., & Cziker, A. C. (2017). Sisteme moderne de conversie a energiei. U.T. Press. https://www.researchgate.net/profile/Ioan-Vadan/publication/340535730_Sisteme_Moderne_de_Conversie_a_Energiei/links/5e8f2a3b299bf130798a2326/Sisteme-Moderne-de-Conversie-a-Energiei.pdf

[6] Mihaly Cozmuța, L., & Mihaly Cozmuța, A. (2022). Analiza instrumentală. Metode electrochimice de analiză (Suport de curs). U.T.

Press. https://biblioteca.utcluj.ro/files/carti-online-cu-coperta/757-6.pdf

[7] MathWorks, “Hydrogen Electrolizer,” [Online]. Available: https://www.mathworks.com/discovery/hydrogen-electrolizer.html

[8] Texas Instruments, “Reference Designs,” [Online]. Available: https://www.ti.com/reference-designs

[9] Mathworks, ”PEM Fuel Cell System,” [Online]. Available: https://www.mathworks.com/help/simscape/ug/pem-fuel-cell-systems.html

[10] M. Carmo, D. L. Fritz, J.Mergel, and D. Stolten,”A comprehensive review on PEM water electrolysis” Int. J. Hydrogen Energy, vol. 38, no. 12, pp. 4901-4934, 2013.

[11] O. Z. Sharaf and M. F. Orhan, “An overview of fuel cell tehnology: Fundamentals and applications,” Renewable and Sustainable Energy Reviews, vol. 32, pp. 810-853, 2014.