Performance Assessment of PV–Wind Hybrid Energy System with Grid Integration

Thamatapu Eswara Rao
Department of Electrical& Electronics
SR University, Warangal
Telangana, India
erao10071993@gmail.com

Markala Karthik
Department of EEE
SR University, Warangal
Telangana, India
m.karthik@sru.edu.in

Ramakrishna S S Nuvvula
NITTE (Deemed to be University) NMAM Institute of Technology
Karnataka, Department of Electrical and Electronics Engineering, Department of Electrical and Electronics Engineering

Ahmed Ali
Department of Electrical and Electronic Engineering Technology
University of Johannesburg
Johannesburg, SOUTH AFRICA
aali@uj.ac.za

"

***Abstract*—This research presents a hybrid renewable energy system integrating photovoltaic (PV), wind, and battery storage technologies. The PV system is developed through mathematical modelling to enhance performance, incorporating a boost con-verter to improve voltage levels. To maximise energy extraction, multiple maximum power point tracking (MPPT) techniques are applied. A wind energy system is simulated using a doubly-fed induction generator(DFIG), designed to operate efficiently across a wide range of wind speeds. Both the rotor-side and grid-side converters of the DFIG system are equipped with suitable control strategies. The reference signals required for pulse width modulation (PWM) controllers are derived from system currents and transformed into a two-axis (direct and quadrature) coor-dinate system. To ensure seamless synchronisation between the distributed generation units and the grid, a three-phase inverter controlled by a PWM-based algorithm is employed, which also mitigates power quality issues. The hybrid system is implemented in real-time hardware using a 1 kW PV array and a 1.5 kW wind system. MPPT algorithms such as Perturb and Observe (P&O) and Incremental Conductance (INC) are programmed into an FPGA controller. The paper also introduces a power management strategy that dynamically applies the P&O and INC algorithms to optimise performance under varying load conditions.**

***Index Terms*—PV system, hybrid system, MPPT, DC-DC converter, DFIG**

I. Introduction

Renewable energy sources are not emptied when the energy is harnessed. The human use of renewable energy requires technologies that harness natural phenomena, such as sunlight, wind, waves, water flow, and geothermal heat. Among the above-mentioned sources of energy, there has been consider-able technological development to harness energy from wind and sunlight, which are abundantly available in nature [1]. A wind and PV system with a battery storage hybrid topology has been proposed, which makes uses a depicted boost-type DC-DC converter for solar PV systems, bidirectional converters for battery systems, and back-to-back converters for double-fed induction generator (DFIG) systems, which are meant to generate voltage levels according to the grid requirements of the PV system [2]. The solar power generation system is optimized by opting for closed-loop algorithms to track the maximum power, and the ever-varying output of the solar collectors is brought to a constant value with the help of the DC-DC converter system, which uses a closed-loop approach to vary the duty cycle of the switching device based on the sensed value of the panel output voltage [3]. Generally, the efficiency of a wind system is improved with the help of an efficient turbine design, mechanical coupling, speed control, and generating systems. The choice of the turbine is very important because it determines parameters such as tip speed ratio (TSR), conversion efficiency, and cut-in speed [4]. The speed of turbine rotation completely depends on the design and characteristics of the wind, and the turbine speed should not vary significantly with respect to the rated speed because it affects the generation characteristics[5]. In this study, the performance analysis of DFIG in various modes of operation and their power-sharing among all its components, as well as the power management strategy of solar, wind, and battery power using different MPPT algorithms.

II. GRID CONNECTED PV SYSTEM

The proposed grid-connected PV system with a conven-tional DC-DC converter is shown in Fig. 1. The proposed PV system was designed as a distributed energy source because it is freely available in nature and is highly efficient. Because of these parameters, PV systems play a key role in power systems [6]. As per the block diagram, the solar PV output is given to the boost converter, which is controlled by a field-programmable gate array controller for the MPPT. This is boosted by the bidirectional converter from the battery voltage because the voltage coming from the battery is 144 V, but the bus voltage is 300 V. Therefore, to match the bus voltage, a bidirectional converter is used, and the voltage

979-8-3315-3681-7/25/$31.00 ©2025 IEEE

source converter (VSC) converts the DC supply to an AC supply and is supplied to the grid [7]. The solar variables are shown in Table 1.

TABLE I: PV System Parameters

Parameter Varible	Value
Maximum Power	100W
Voltage	18.7 V
Current	5.35A
Voltage at open circuit	22.32 V
Current at Short circuit	5.65 A

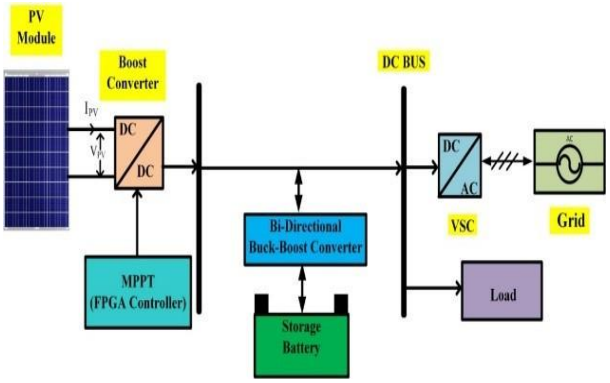

Fig. 1: Solar based Grid-connected system.

A. BOOST CONVERTER

As shown in Fig. 2, the purpose of MPPT is to generate a suitable reference signal for a boost converter based on the PV system parameters. The specifications of boost shown in Table 2. Here, P&O and INC were chosen as MPPT controllers. To maintain proper equilibrium between the PV and grid systems, a PWM-based inverter was proposed. From the boost converter, the output power is provided to the DC bus, where the load that handles the DC power can be directly connected to the DC bus [8]. A bidirectional converter is used to interface the DC variables comprising the DC/AC conversion, which helps to convert the generated power from the solar PV array to an alternate current that can be further supplied to the grid. A field-programmable gate array is an integrated circuit that is designed according to the requirements of the control unit. Generally, an FPGA is specified as a hardware description language similar to that used for application-specified integrated circuits and provides the necessary information required to the FPGA controller to maintain a flexible constant outcome to the grid. The FPGA controller provides gate pulses to the bidirectional converter, which helps the device trigger a respectable moment for an effective voltage [9].

III. Double Fed Induction Generator (DFIG)

A slip-ring induction motor with a back-to-back converter configuration is called a double-fed induction generator [10]. The proposed DFIG circuit is shown in Fig.3. The rotor of a slip-ring induction motor connected to a converter is called the rotor-side converter (RSC).In this DFIG, the supply is

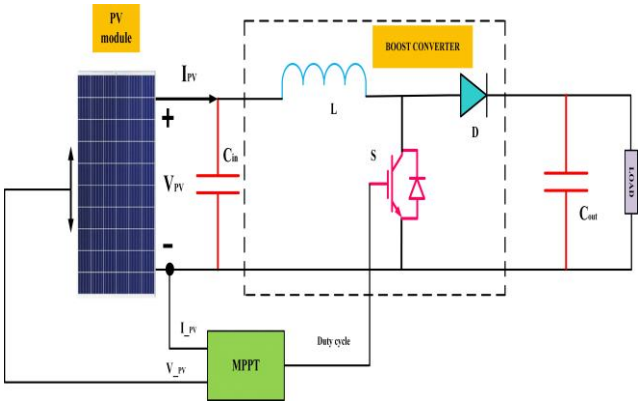

Fig. 2: Hardware Implementation for Boost Converter.

provided to the rotor, and because of the induction principle, the output power is available at the stator. The frequency of the stator is the slip frequency and that of the rotor is the supply frequency . The main application of the DFIG in wind plants is to generate power (power sent to the grid) in all three modes: sub synchronous, synchronous, and super synchronous. In this study, a DC shunt motor is used instead of a wind turbine to rotate the rotor. The DC shunt motor was controlled using a chopper drive[11]. In this study, we designed the DFIG to act as a motor at a speeds below 560 rpm and a speeds above 560 rpm to act as a generator. We considered a reference power of 422 W fed back to the grid through the stator. The grid-side converter (GSC) consumes power from the grid to generate power at the stator of the DFIG[12].In addition, a phase-locked loop(PLL)-based park-transformation technique was designed to generate the reference signal required for the PWM techniques of both the grid-side and rotor-side converters of a doubly fed induction generator of a wind emulator. In the sub synchronous and synchronous modes of speed operation, the power fed back to the grid through the stator only, but in the super-synchronous mode, the power fed back to the grid through both the stator and rotor and the parameters of shunt motor and the slip ring induction motor have back-to-back converter are given in Tables 3 and 4.

TABLE II: DC-DC Boost converter Specifications.

Parameter Varible	Value
Rated Power	1500 W
Minimum DC Input Voltage	150V
Maximum DC output Voltage	350V
Maximum Switching Frequency	100KHz
L	5mH
(Cin & Cout)	1500 micro Farad
IGBT	1200V/100A

IV. Optimisation Algorithms

A. Perturb and Observe (P& O) Algorithm

The Maximum Power Point Tracking technique was employed in the photovoltaic system to maximise the power output by monitoring panel irradiance and temperature in the P&O flow chart shown in Fig.4.

TABLE III: Parameters of DC shunt motor.

Parameter Varible	Value
Rated Power	2 HP
Armature voltage	220V
Armature current	8A
Field voltage	220V
Field currentt	0.7A
Speed	1500 rpm

TABLE IV: Parameters of slip ring induction motor.

Parameter Varible	Value
Output Power	2 HP
Voltage (Stator&Rotor)	415V
Current (Stator&Rotor)	3.5A
Speed	1440 rpm
Frequency	50 Hz

- Step 1: Test the potential and amperage of the solar panel and set reference values.
- Step 2: Estimating Energy: Multiply the voltage that was captured by the amperage to estimate the photovoltaic panel's energy.
- Step 3: the electrical voltage and power values that differ from the reference value indicate the approximate rate of duty of the Transistors and IGBT, respectively [13].

B. Incremental Conductance Algorithm

This approach utilizes the slope of the current derivative with respect to voltage to identify the maximum power point (MPP) [14]. The flowchart of the Incremental Conductance method is illustrated in Fig. 5. In this study, the Perturb and Observe method was chosen for the PV array due to its simplicity and reliable performance. The algorithm begins by setting an initial reference voltage for the PV array, followed by measuring the output power. If the measured power is not at the maximum point, the reference voltage is incremented or decremented by a fixed step size, guiding the system toward the optimal operating point [15].

V. Experimental Results

Figure 6 illustrates the architectural layout of the hybrid energy system combining photovoltaic (PV) and wind sources.

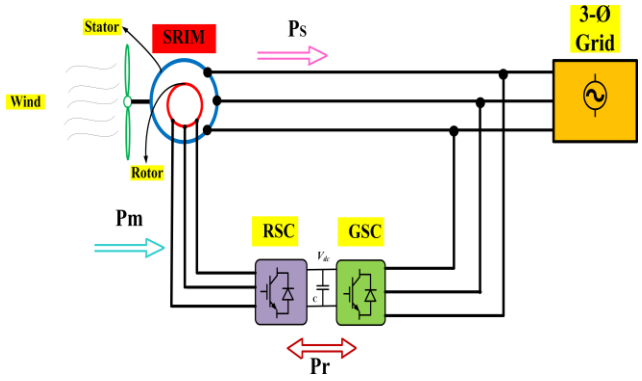

Fig. 3: Basic circuit diagram of DFIG.

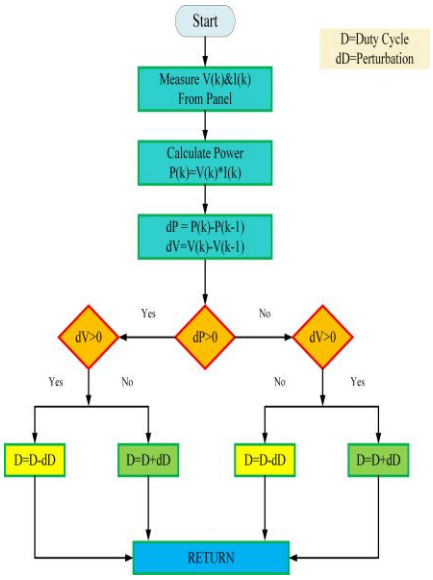

Fig. 4: Flowchart of P & O MPPT.

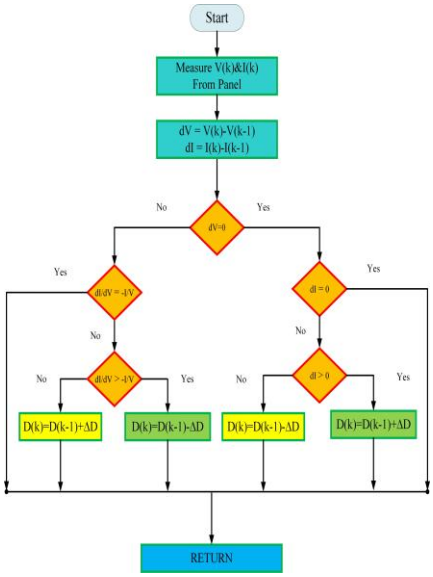

Fig. 5: Flowchart of Incremental Conductance MPPT.

This system interfaces with the power grid through a DC-DC boost converter and connects to an energy storage unit (battery) using a bidirectional buck-boost converter, a three-phase voltage source converter (VSC), and a doubly-fed induction generator (DFIG). An FPGA-based controller was implemented to manage the maximum power point tracking (MPPT) within the boost converter. The physical setup comprises:

- a 1 kW photovoltaic array operating under 1000 W/m² solar irradiance,
- a boost converter,
- a battery system coupled with a bidirectional buck-boost converter,

- a DFIG equipped with a chopper-controlled DC drive,
- a three-phase 10 kVA voltage source converter, and
- a three-phase autotransformer serving as the grid interface.

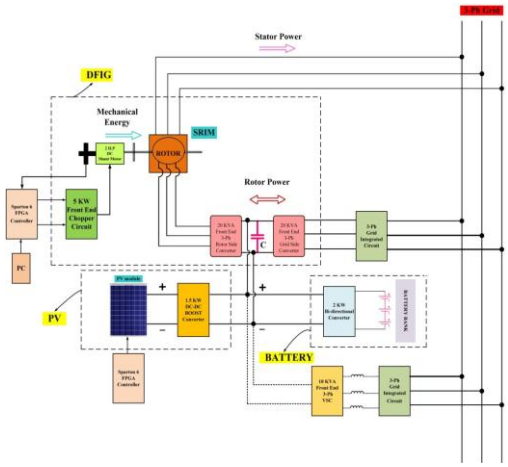

Fig. 6: Proposed PV-wind hybrid system block diagram.

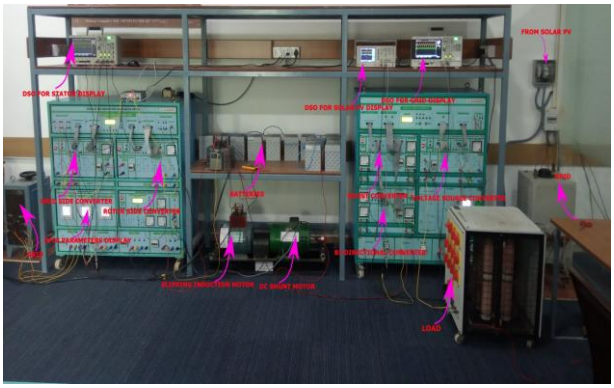

Fig. 7: Experimental setup of the PV-wind hybrid system.

The hardware model utilized in this study was evaluated under a variety of situations. 1. Effectiveness investigation of DFIG generation across all three stages of functioning. 2. The power control method for the suggested hybrid system with P&O and INC methods under various load circumstances.

A. Real-time evaluation of power generation using a standalone DFIG operating under various generator speed modes

Fig. 7 (a), (b), and (c) indicate that the DFIG acts as a generator, and the power generation of the DFIG at a sub synchronous speed of 1440 rpm, where the power available at the grid is equal to the sum of the power delivered by the stator to the grid and the power consumed by the grid-side converter from the grid. The power consumed by the grid-side converter is 109 W, the power delivered by the stator is -422 W (the negative sign indicates the power delivered to the grid), and the total power available at the grid is -314 W.From the above performance analysis of the DFIG, we observed that the grid-side converter consumes less active power when the speed increases above the synchronous speed to generate same stator power (reference power) of 422 W to fed back to the grid, as shown in Table 5.

TABLE V: Comparison of power consumption of the grid-side converter (GSC) at different speeds

S.No.	speed(rpm)	Stator(W)	Grid (W)	GSC(W)
1.	1200	-419	-274	145
2.	1440	-422	-314	109
3.	1600	-419	-340	78

B. Theload sharing performance of a PV-wind hybrid energy system was analyzed under varying load demands and irradiance levels ranging from 1000 W/m² to 800 W/m², at a constant ambient temperature of 25°C, and across multiple DFIG operating speeds. Two MPPT techniques—Perturb and Observe (P&O) and Incremental Conductance (INC)

Figures 8 (a), (b), and (c) present the energy flow regulation for a system operating under a load demand of 480 W, utilising the Incremental Conductance (INC) MPPT technique. In this scenario, the photovoltaic (PV) array produced a total output of 522 W.The doubly-fed induction generator (DFIG) contributed -419 W, where the negative sign indicates that power was being delivered to the grid. Since the load demand was only 480 W, the excess power—calculated as -39 W—was directed to charge the battery, as denoted by the negative sign indicating charging mode. Simultaneously, the DFIG operated at a speed of 1600 rpm and supplied power back to the grid, again reflected by the negative power value. Under these operating conditions, both the battery and grid receive surplus energy—battery from the PV system and grid from the DFIG. negative sign.The load sharing for different renewable sources with the grid and battery listed in Table 6. The hardware setup of the PV-Wind hybrid system is shown in Fig.9.

TABLE VI: Load Sharing for different Renewable sources with grid and battery Demand

Load (W)	MPPT	PV(W)	WIND (W)	Grid(W)	Battery(W)
1440	INC	551	419	418	52
310	INC	522	415	-588	-39
480	INC	522	419	-419	-39
1230	P&O	475	419	300	38.8
820	P&O	450	422	0	-52
475	P&O	430	0	45	0

VI. Conclusion

An MPPT-based hybrid system comprising PV, wind, and battery energy systems is implemented in this study. An MPPT-based closed-loop system is designed to control the boost converter. This study proposed P&O and INC MPPT controllers. The bidirectional controller used for battery systems helps control the charging and discharging conditions of the battery. An FPGA based MPPT technique was implemented to set up the hardware implementation of the PV-wind and battery energy-based hybrid systems. A comparative

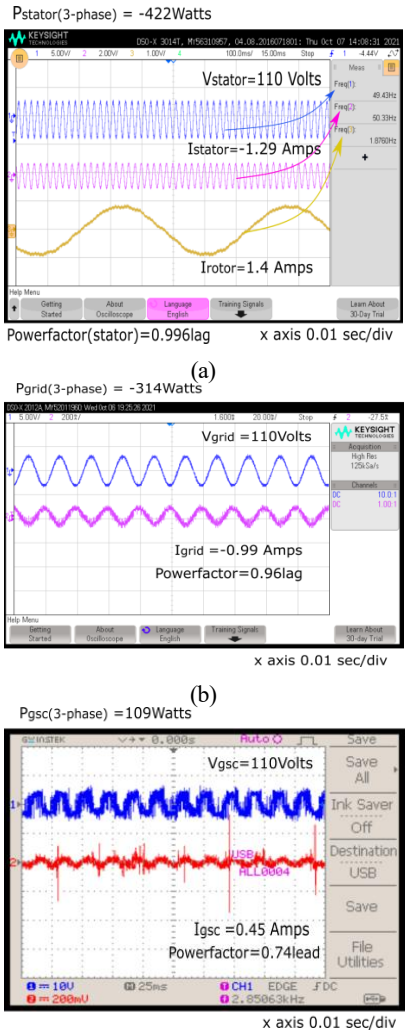

Fig. 8: DFIG acting as a generator at synchronous speed of 1440 rpm corresponding to the power-sharing between (a) Stator (b) Grid (c) Grid side converter

analysis of the power management strategies of different MPPT techniques was performed. These results indicate that the INC MPPT technique yields better results than other MPPT controllers. The performance of the DFIG-based wind emulator is verified at different speeds.

REFERENCES

[1] R. P, B. Srinivasarao, V. Veeranjaneyulu I, J. K. P. Julio, T. E. Rao and R. Rambabu, "Decentralized Energy Management Systems for Renewable Microgrids Using Multi-Agent Optimization Techniques," 13th International Conference on Smart Grid (icSmartGrid), Glasgow, United Kingdom, pp. 440-445,2025.

[2] J.Ankamma Rao, G. T. Zelie, K. Avinash and M. Srisuresh, "Soft Computing Based Hybrid MPPT for Grid Connected Photovoltaic System," International Conference on Electronics, Computing, Communication and Control Technology (ICECCC), Bengaluru, India, pp. 1-6, 2024.

[3] Y. M. Shuaib, A. Prabha, S. Gomathi and J. R. Ignatius, "Enhancing Grid Connected PV System Performance Through Adaptive PI Control and Improved DC to DC Converter," International Conference on

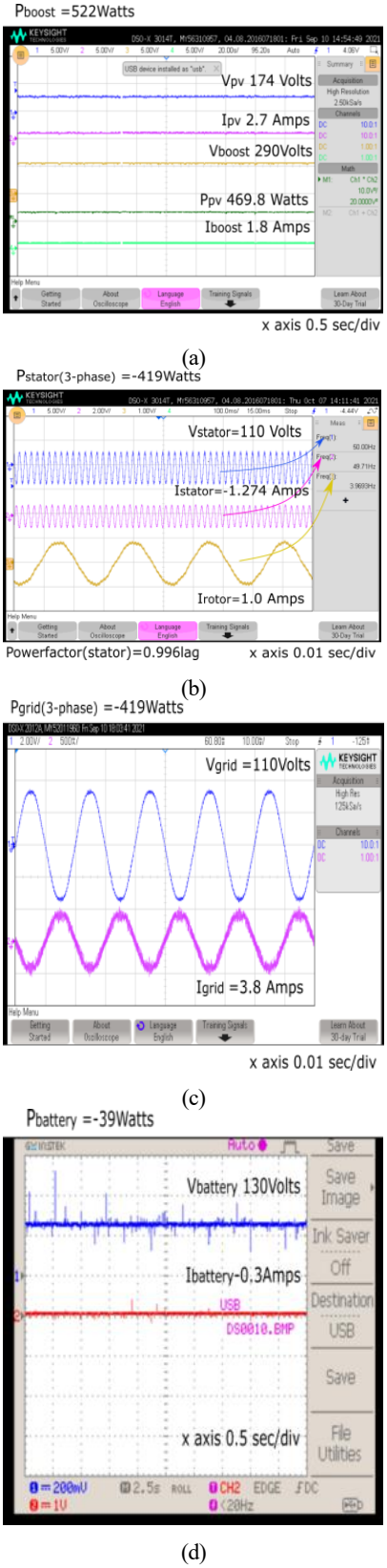

Fig. 9: Load sharing of 480 watts with IC Technique (a) Solar (b) DFIG (c) Grid (d) Battery

Advancement in Renewable Energy and Intelligent Systems (AREIS), Thrissur, India, pp. 1-6, 2024.

[4] G. Manavaalan, Eswara Rao Thamatapu, P. Vinodh Kumar, and S. Elango. ”A Novel Bat Algorithm-Optimised Quantum Neural Network-Based MPPT Techniques for Enhanced Photovoltaic in Grid Connected System Performance.” Journal of Circuits, Systems and Computers, vol. 38, pp. 1793-1798,2025.

[5] S. Gowthami, J. S. Prasad, B. Naidu, E. S. Latha, N. M. Redddy and S. Boddepalli, ”Renewable Energy Based Smart-Agriculture System,” 2025 International Conference On Emerging Computation and Information Technologies (ICECIT), Tumkur, India, 2025, pp. 1-5, 2025.

[6] V. Gurugubelli, A. Ghosh, and A. K. Panda, “Different Oscillator Controlled Parallel Three-Phase Inverters in Standalone Microgrid,” Sustainable Energy and Technological Advancements: Proceedings of ISSETA 2021, Springer Singapore, pp. 67-79, Mar.2022.

[7] S. Elango and G. G. Swamy, ”Power Management Strategy Between PV-Wind-fuel Hybrid System,”7th International Conference on Electrical Energy Systems (ICEES), Chennai, India, pp. 101-107, 2021.

[8] S. Patel, A. Ghosh, P. K. Ray, and V. Gurugubelli, “Effective Power Management Strategy and Control of a Hybrid Microgrid with Hybrid Energy Storage Systems,”IEEE Transactions on Industry Applications, vol. 10, pp. 457–461, 2023.

[9] Elango, S. and Kumar, J.C. Power Quality Improvement in Microgrid System Using PSO-Based UPQC Controller. In Microgrid Technologies (https://doi.org/10.1002/9781119710905.ch11).

[10] T. E. Rao, S. Chenniappan, A. Praveena, T. Santhosh, B. Pydi and P. M. Rao, ”Power Quality Enhancement Using DSTATCOM With Artificial Neural Network Controller, ”International Conference On Emerging Computation and Information Technologies (ICECIT), Tumkur, India, pp. 1-6, 2025.

[11] G. Ponnada, T. E. Rao, V. Krishna, S. Rao Boddepalli, B. Bhusan Rath and K. D. Syam Prasad, ”Design and Performance Analysis of Vertiwind Power Generation by Radial Axis Permanent Magnet Generator,” International BIT Conference (BITCON), Dhanbad, India, pp. 1-5, 2024.

[12] H. Benrabah, M. Jasin´ski and Z. Leonowicz, ”Detecting Abnormal Profiles in a PV Power Plant Data Using Learning Algorithms,” IEEE International Conference on Environment and Electrical Engineering and 2024 IEEE Industrial and Commercial Power Systems Europe (EEEIC / I&CPS Europe), Rome, Italy, pp. 1-5,2024.

[13] S.Elango, “Maximum Power point Tracking Techniques of FPGA Based PV Grid-Connected System,” IASC, vol. 35, pp. 1783-1798, 2023.

[14] C. V. N. Raja, J. A. Rao, B. Naidu, B. M. Rao, T. E. Rao and V. Gurugubelli, ”Farming 4.0: Integrating Technology for Smart Agriculture,” International BIT Conference (BITCON), Dhanbad, India, pp. 1-6, 2024.

[15] T. E. Rao et al., ”A Non-Isolated Bidirectional Converter with Enhanced Voltage Gain and Common Ground for Energy Storage Systems,” IEEE Journal of Emerging and Selected Topics in Industrial Electronics, doi: 10.1109/JESTIE.2026.3675382