Grid-Interactive Fast EV Charging Station Based on a 12-Pulse Active Rectifier for Smart Grid Applications

Mohamad Taha
College of Engineering,
Rafik Hariri University (RHU)
Damour-Chouf, Lebanon
tahamh@rhu.edu.lb

Ali M. A. Almaktook
Dept. Department of Electrical, Electronic and Computer Engineering,
Peninsula University of Technology (CPUT)
Cape Town, South Africa
almaktoofa@cput.ac.za

Anges A. Aminou Moussavou
Dept. Department of Electrical, Electronic and Computer Engineering,
Peninsula University of Technology (CPUT)
Cape Town, South Africa
Aminou-moussavoua@cput.ac.za

Kareem Halablab
Estimation dept.
Nesma & Partners, Partners, Spark Tower, Sin El Fil,
Beirut, Lebanon
kareem.halablab@nesmapartners.com

Abstract*—The rapid growth of electric vehicles (EVs) is creating new challenges for modern power systems and accelerating the need for smart grid-compatible charging infrastructure. High-power EV fast charging stations can significantly impact distribution networks by increasing peak demand, harmonic distortion, voltage fluctuations, and reactive power requirements, particularly when multiple vehicles are charged simultaneously. To address these challenges, this paper presents the analysis and simulation of a grid-interactive fast EV charging station based on a 12-pulse AC/DC active rectifier. The proposed converter employs DQ vector control to achieve regulated DC output voltage, low input current harmonics, and near-unity power factor operation while supporting bidirectional power flow. In addition to fast charging functionality, the proposed system offers smart grid support capabilities through reactive power control and improved power quality. The charging station is modelled and simulated using PSIM software under various operating conditions. Simulation results demonstrate the effectiveness of the proposed topology in enhancing grid interaction, reducing harmonic distortion, and enabling the reliable integration of high-power EV charging stations in future smart grid environments.

Keywords— Electric Vehicle Fast Charging, Smart Grid,12-Pulse Active Rectifier Power Quality, Vehicle-to-Grid (V2G)

I. Introduction

In modern transportation systems, the electric vehicle (EV) industry is experiencing unprecedented growth and has become one of the most significant developments in both the automotive and power sectors due to its potential to reduce greenhouse gas emissions and dependence on fossil fuels. However, the large-scale integration of EVs introduces new challenges for power system operators, particularly within modern smart grid environments. The increasing penetration of EV charging stations can significantly affect distribution networks by increasing peak demand, transformer loading, feeder losses, voltage fluctuations, and harmonic distortion. Therefore, it is essential to evaluate the impact of EV integration on smart grids to ensure reliable, efficient, and standard-compliant grid operation while maintaining power quality and system stability [1].

There are three levels of EV charging: Level 1, Level 2, and Level 3, as outlined and explained by the Society of Automotive Engineers. Each charging level is characterized by different voltage levels, power ratings, and charging durations [2–3].

Level 1: Automakers often include Level 1 charging equipment with new electric vehicles. This device plugs into a typical household 120-V outlet. Although simple and inexpensive, this charging method replenishes the battery slowly and therefore requires a long charging time.

Level 2: Level 2 charging operates at 240 V and typically at three to four times the current rating of Level 1 charging systems. Most Level 2 chargers provide charging rates approximately six to eight times faster than Level 1 systems, corresponding to about 12–32 miles of driving range per hour of charging.

Level 3 or DC Fast Charging: Level 3 chargers represent the fastest charging technology currently available for EVs. Commonly known as DC fast chargers, they are particularly important for long-distance transportation applications because they can add approximately 100–250 miles of driving range in only 30–45 minutes. Unlike Level 1 and Level 2 charging systems, Level 3 chargers employ additional power terminals capable of handling high voltages, typically 400-1000 V. The power rating of modern DC fast chargers ranges from approximately 50 kW to 350 kW. Due to their high power demand, Level 3 chargers are usually installed in charging stations utilizing high-power AC/DC conversion systems. Figure 1 illustrates the general block diagram of a

Level 3 charging station, consisting of an input filter, an AC/DC rectifier stage, a DC-link stage, and a DC/DC converter stage. Table 1 summarizes the specifications of the different EV charging levels [4].

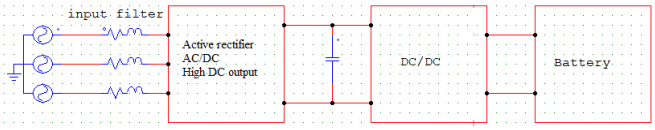

Figure 1. Level 3 charger.

Table 1. Specifications of Electric Vehicle Chargers

	AC Voltage (V)	Max. Current (A)	Max. Power (kW)
Level 1	120	16	1.92
Level 2	240	80	19.2
Level 3	300-600	400	240

From a smart grid perspective, the rapid deployment of high-power EV charging stations presents both opportunities and challenges. Although EVs can support the transition toward cleaner transportation, uncontrolled charging may create severe stress on the distribution network, especially when many vehicles are charged simultaneously. High-power charging stations can increase peak demand, accelerate transformer aging, reduce feeder capacity margins, and increase network losses. Furthermore, future smart grids require charging infrastructure capable of interacting intelligently with the electrical network, supporting demand response programs, voltage regulation, and Vehicle-to-Grid (V2G) services [5–6].

Power electronics plays a crucial role in achieving these objectives while maintaining high power quality. The growth of the EV market has accelerated the need for advanced converter technologies capable of providing efficient charging while minimizing adverse impacts on the grid [4–6]. Power electronic converters are inherently nonlinear loads and may inject harmonic currents into the utility network if not properly designed and controlled. These harmonics can increase losses, reduce equipment lifetime, and deteriorate overall power quality. Consequently, international standards impose strict harmonic limits that EV charging infrastructure must meet [7].

Several converter topologies have been proposed for EV charging applications, including unidirectional boost converters, active boost and buck rectifiers, Vienna rectifiers, Swiss rectifiers, and matrix converters. Conventional 12-pulse diode rectifiers offer a simple, robust solution with lower low-order harmonics than 6-pulse rectifiers. However, they suffer from limited controllability, fixed DC output voltage, and reduced capability to support smart grid functions. In contrast, the proposed 12-pulse active rectifier combines the harmonic reduction advantages of multipulse conversion with the flexibility of active switching devices. By employing a DQ vector control strategy, the magnitude and phase of the input current can be independently controlled, enabling precise regulation of active and reactive power exchange between the charging station and the utility grid. As a result, the converter can provide regulated DC voltage, near-unity power factor operation, low current harmonic distortion, reactive power support, and bidirectional power flow capability, making it highly suitable for future smart grid applications [8–9].

The design of a grid-interactive EV fast charging station poses significant challenges due to the wide operating range and the demanding requirements imposed by both the EV battery and the utility network. Therefore, the charging system should provide the following important features [8–9]:

1. A high input power factor to minimize reactive power requirements.
2. Maximum power density to reduce converter size and weight.
3. Regulated DC output voltage under varying operating conditions.
4. Low harmonic distortion and nearly sinusoidal input currents.
5. Reactive power control capability for smart grid support.
6. Bidirectional power flow capability for future Vehicle-to-Grid applications.

This paper presents a grid-interactive fast EV charging station based on a 12-pulse AC/DC active rectifier for smart grid applications. The proposed system employs DQ vector control to regulate the DC-link voltage, minimize harmonic distortion, achieve near-unity power factor operation, and enable controllable active and reactive power exchange with the utility network. The charging station is modeled and simulated using PSIM software under various operating conditions to demonstrate its effectiveness in improving power quality and supporting future smart grid functionalities.

II. Technical Challenges And Grid Integration Of EV Charging Stations

A. Harmonics and Power Quality Issues in EV Charging Stations

The large-scale deployment of EV fast-charging stations introduces significant power-quality challenges for modern smart grids. Since power electronic converters are inherently nonlinear devices, they draw nonsinusoidal currents from the utility network and consequently inject harmonic currents into the power system. These harmonics can increase power losses in transformers and cables, reduce equipment lifetime, interfere with communication and protection systems, and, in some cases, excite resonance phenomena that result in excessive voltage distortion. As smart grids rely on high power quality and efficient utilization of network assets, harmonic mitigation has become an important requirement in the design of EV charging infrastructures.

In general, rectifiers produce characteristic harmonics according to:

$$h = \frac{f_h}{f_1} = K.P \pm 1 \qquad (1)$$

Where: h = order of harmonics; f_h = frequency of the harmonic current; f1 = fundamental frequency; P = rectifier pulse number; and K = 1, 2, 3, ...

In addition to harmonic distortion, the presence of harmonics affects the charging station's overall power factor. When voltage and current waveforms contain harmonic components, the phase displacement between the fundamental voltage and current is no longer sufficient to represent the actual power factor. Therefore, the overall power factor must be calculated as [9]:

$$PF = \frac{\text{mean power}}{V_{rms} I_{rms}} \quad (2)$$

Power factor is a critical parameter in smart grid operation because it directly affects transmission efficiency, feeder loading, and reactive power demand. Charging stations operating at low power factor require additional reactive power from the grid, increasing network losses and reducing the available capacity of distribution equipment.

Conventional diode rectifiers draw nonsinusoidal currents with significant harmonic content. Assuming a sinusoidal input voltage, it is well known that a three-phase 6-pulse diode rectifier exhibits a power factor of approximately 0.955 and a current total harmonic distortion (THD) of 31.08%. Although the power factor is acceptable, the high THD level may adversely affect power quality and violate the harmonic limits set by modern grid standards. Such harmonic levels can become particularly problematic in smart grid environments where multiple EV fast chargers operate simultaneously.

To reduce harmonic distortion, multipulse rectifier configurations are frequently employed. A conventional 12-pulse diode rectifier consists of a three-phase transformer with a star-connected primary winding and two secondary windings connected in a star and a delta configuration. Each secondary winding feeds a separate six-pulse rectifier, and the outputs are combined to form a 12-pulse conversion system. The 30° phase shift introduced between the star and delta secondary voltages provides significant harmonic cancellation. To maintain the same output voltage level, the turns ratio of the delta-connected transformer must be adjusted accordingly.

For a conventional six-pulse rectifier, the dominant harmonics are the 5th and 7th orders. In a 12-pulse configuration, these low-order harmonics are effectively cancelled due to the phase-shifted operation of the two rectifier bridges. As a result, the current THD is reduced from approximately 31.08% to 15.5%, representing nearly a 50% reduction compared with a six-pulse rectifier.

Although the 12-pulse diode rectifier significantly improves harmonic performance, it still lacks the controllability required for advanced smart grid applications. The converter operates with a fixed output voltage, provides limited control over reactive power exchange, and cannot actively support grid operation. Therefore, active rectifier topologies have become increasingly attractive for modern EV fast-charging stations because they combine harmonic mitigation with power factor correction, voltage regulation, reactive power control, and bidirectional power flow. These features enable the charging station to operate as an intelligent grid-interactive interface rather than a passive electrical load.

B. Smart Grid Requirements for EV Fast Charging Stations

The integration of high-power EV fast charging stations into modern distribution networks creates new technical challenges for smart grids. Unlike conventional residential or low-power chargers, DC fast chargers draw large amounts of power over short charging periods, which can increase peak demand, cause voltage deviations, raise transformer and feeder loading, and introduce harmonic distortion into the utility network [5,7,10]. Therefore, the charging station should not be treated only as a passive load, but rather as a controllable power-electronic interface capable of supporting grid operation.

From a smart grid perspective, an advanced EV fast-charging station should meet several key requirements. First, it should maintain high input power quality by drawing nearly sinusoidal currents with low harmonic distortion. Second, it should operate at a high power factor to reduce reactive power demand and improve feeder utilization. Third, it should regulate the DC-link voltage under different charging conditions to ensure stable power delivery to the EV battery. Fourth, it should provide controllable reactive power exchange to support voltage regulation at the point of common coupling. Finally, bidirectional power flow capability is required for future Vehicle-to-Grid (V2G) operation, where EV batteries can contribute to peak shaving, ancillary services, and grid stability [5,6,10–11].

The 12-pulse active rectifier proposed in this paper directly addresses these requirements. The phase-shifted transformer structure reduces dominant low-order harmonics, while the DQ control strategy enables independent control of active and reactive power. As a result, the converter can achieve regulated DC output voltage, near-unity power factor operation, reduced current distortion, and reactive power support. These features make the proposed topology suitable for grid-interactive EV fast charging stations in future smart grid environments [8–11].

III. Proposed 12-Pulse Active Rectifier With DQ Vector Control

The front-end AC/DC converter is one of the most critical components in a high-power EV fast-charging station because it directly influences power quality, efficiency, and the interaction between the charging infrastructure and the utility grid. Conventional diode rectifiers are widely used due to their simplicity and robustness; however, they suffer from fixed DC output voltage, limited controllability, poor reactive power management, and restricted capability to support modern smart-grid functions. To overcome these limitations, this work proposes a 12-pulse active rectifier employing DQ vector control for grid-connected EV fast charging applications.

The proposed converter combines the harmonic reduction capability of multi-pulse conversion with the flexibility of active switching devices. The system consists of two three-phase active rectifier bridges, each supplied by a phase-shifted transformer secondary winding. A 30° phase shift is introduced between the two secondary voltages, resulting in the cancellation of dominant low-order harmonics and a significant reduction in input current distortion. Consequently, the converter achieves superior power quality compared with conventional six-pulse and twelve-pulse diode rectifiers while maintaining full control over the power exchanged with the utility network [8].

Figure 2 illustrates the proposed 12-pulse active rectifier topology. The active switching devices enable bidirectional power flow, making the converter suitable not only for EV charging applications but also for future Vehicle-to-Grid

(V2G) services. Furthermore, the converter can independently regulate active and reactive power, allowing the charging station to actively participate in smart-grid support functions such as voltage regulation, reactive power compensation, and demand response programs [5,6].

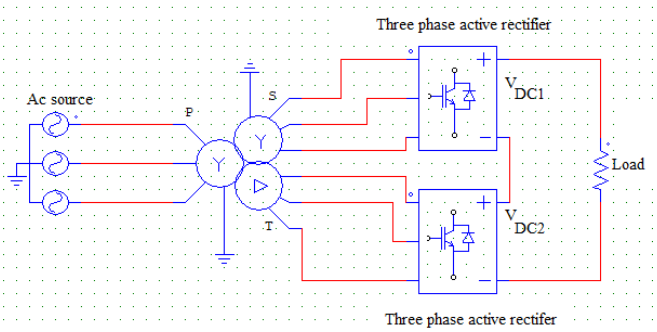

Figure 2. Proposed 12-pulse active rectifier topology.

To explain the control principle, a single three-phase active rectifier bridge is considered, as shown in Figure 3. The controller employs DQ vector control, where the measured three-phase currents and voltages are transformed into a synchronously rotating reference frame aligned with the supply voltage vector. Under balanced operating conditions, the transformed variables become DC quantities in steady state, greatly simplifying the control process and enabling independent regulation of active and reactive power.

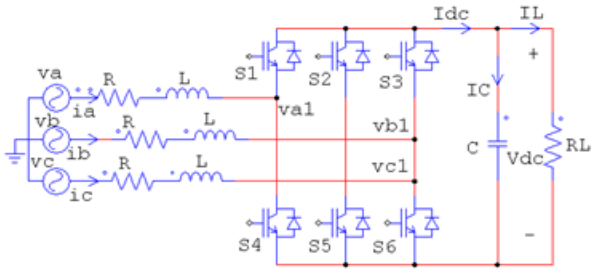

Figure 3. Single six-pulse active rectifier used for DQ control analysis.

Considering the input filter resistance and inductance, the converter dynamics in the DQ reference frame are expressed by:

$$v_d = Ri_d + L.di_d/dt - \omega Li_q + v_{d1} \quad (3)$$

$$v_q = Ri_q + L.di_q/dt + \omega Li_d + v_{q1} \quad (4)$$

Where R and L represent the equivalent input resistance and inductance, respectively, while vd1 and vq1 represent the converter voltage components in the rotating reference frame. The terms ωLiq and ωLid introduce coupling between the D-axis and Q-axis current channels. Therefore, feedforward decoupling compensation is incorporated within the controller to improve the dynamic response and ensure independent control of both current components [9].

The instantaneous active and reactive powers exchanged between the converter and the utility grid can be expressed as:

$$P(t) = 3/2\,(v_d.i_d + v_q i_q) \quad (5)$$

$$Q(t) = 3/2\,(v_d.i_q - v_q i_d) \quad (6)$$

When the D-axis is aligned with the supply voltage vector, the quadrature voltage component becomes approximately zero ($v_q \approx 0$). Under this condition, the active and reactive power expressions simplify to:

$$P = 3/2(v_d.i_d) \quad (7)$$

$$Q = 3/2(v_d.i_q) \quad (8)$$

These equations clearly demonstrate that the D-axis current component directly controls active power transfer, whereas the Q-axis current component controls reactive power exchange. Therefore, by regulating id, the converter controls the charging power and DC-link voltage, while iq can be adjusted to achieve either unity power factor operation or controlled reactive power support.

For unity power factor operation, the Q-axis current reference is selected as:

$$iq^* = 0 \quad (9)$$

As a result, the input current remains nearly in phase with the supply voltage, minimizing reactive power demand and reducing losses within the distribution network.

The control structure consists of two cascaded control loops, as illustrated in Figures 4 and 5. The outer loop regulates the DC-link voltage, whereas the inner loop controls the D-axis and Q-axis currents.

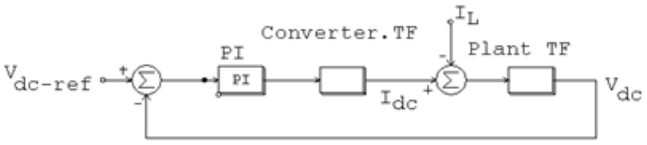

Figure 4. Outer DC-link voltage control loop.

The DC-link voltage controller compares the measured DC voltage with the reference value and processes the resulting error through a proportional-integral (PI) controller to generate the D-axis current reference. The controller transfer function is given by:

$$Gv(s) = Kpv + \frac{Kiv}{s} \quad (10)$$

The DC-link dynamics can be represented by the capacitor-load relationship shown in Figure 4, leading to:

$$C(dVdc/dt) = idc - Vdc/RL \quad (11)$$

Taking the Laplace transform yields the open-loop transfer function relating the DC-link voltage to the converter current:

$$Vdc(s)/Idc(s) = RL/(1 + sRLC) \quad (12)$$

This transfer function represents the plant model used for tuning the outer voltage control loop.

The inner current controller regulates the converter input currents. Since the converter-side dynamics are dominated by the input filter inductance and resistance, the phase current dynamics can be approximated by:

$$va = Ria + L(dia/dt) \quad (13)$$

The corresponding plant transfer function becomes:

$$Ia(s)/Va(s) = 1/(Ls + R) \quad (14)$$

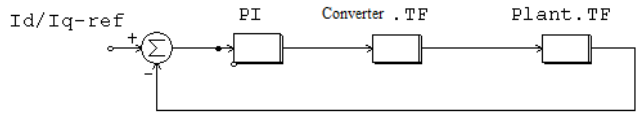

Figure 5. Inner DQ current control loop.

Based on this model, PI controllers are employed for both the D-axis and Q-axis current channels. The resulting control structure is shown in Figure 5, where the measured currents are compared with their reference values and the resulting errors are processed through PI compensators to generate the converter voltage references.

The outputs of the D-axis and Q-axis current controllers are combined with the decoupling terms before being transformed back into three-phase quantities. These signals are then used to generate the PWM switching commands for the active rectifier. The complete DQ control scheme implemented in this study is presented in Figure 6.

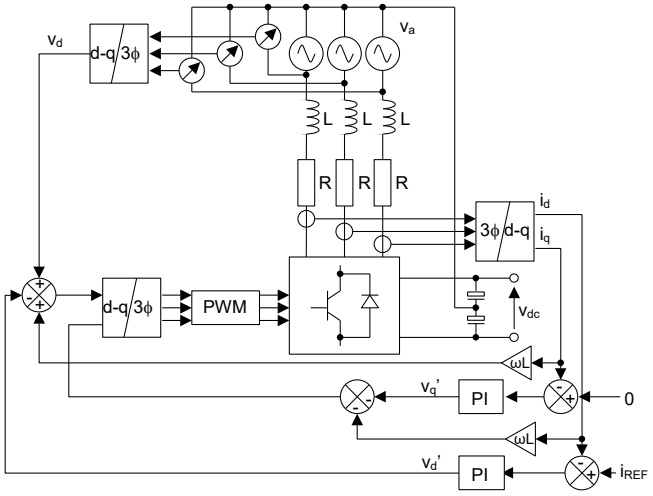

Figure 6. Complete DQ vector control scheme of the active rectifier.

The proposed control strategy provides several advantages for smart-grid-connected EV charging stations. First, it maintains a regulated DC-link voltage under varying operating conditions and charging power levels. Second, it achieves near-unity power factor operation while significantly reducing input current harmonic distortion. Third, the independent control of active and reactive power allows the charging station to support grid voltage regulation and reactive power compensation. Finally, the bidirectional nature of the converter makes the proposed topology suitable for future Vehicle-to-Grid applications, enabling EV batteries to operate as distributed energy resources that can support grid stability during peak demand [5,6,9].

Consequently, the proposed 12-pulse active rectifier operates not only as a high-performance AC/DC conversion stage for fast EV charging but also as an intelligent grid-interactive interface that supports future smart-grid functionalities while maintaining excellent power quality.

IV. Simulation Results And Discussion

The proposed 12-pulse active rectifier was simulated in PSIM to evaluate its performance as a grid-interactive front-end converter for high-power EV fast charging stations. The main objective of the simulation was to verify the converter's ability to regulate the DC-link voltage, maintain high input power quality, reduce low-order current harmonics, and provide controllable power-factor operation. These features are essential for smart-grid-connected charging stations, where the charger must operate as an intelligent power-electronic interface rather than a passive nonlinear load.

The simulation parameters were selected to represent a high-power AC/DC conversion stage suitable for EV fast charging applications. The AC input voltage was set to 220 V RMS, the switching frequency was 5 kHz, the input resistance was 0.1 Ω, the input inductance was 500 μH, and the DC-link capacitor was 500 μF for each converter. The resistive load was 30 Ω, and the DC voltage reference of each active rectifier was set to 800 V. The two active rectifier bridges were supplied through phase-shifted transformer windings to achieve 12-pulse operation and reduce low-order harmonics.

To evaluate the performance of the proposed charging station under conditions relevant to smart grid operation, the converter was tested under steady-state, power-factor variation, load change, and transformer ratio variation scenarios. These operating conditions were selected to verify the proposed system's ability to maintain DC-link voltage regulation, improve input power quality, and provide controllable reactive power support under varying grid conditions.

Figure 7 shows the DC voltage, input voltage, and input current under unity power factor operation. The DC-link voltage is regulated at its reference value, while the input current remains nearly sinusoidal and in phase with the supply voltage. This confirms effective voltage regulation and near-unity power factor operation.

Figure 8 presents the input current harmonic spectrum. The dominant low-order harmonics are significantly reduced due to the 12-pulse configuration and active current control. The results confirm improved input power quality compared with conventional rectifier systems.

Figure 9 illustrates converter operation under lagging power factor conditions. The input current is shifted with respect to the supply voltage, while the DC-link voltage remains stable. This demonstrates the proposed controller's capability to provide reactive power support.

Figure 10 shows the converter response during leading power-factor operation. Stable DC-link voltage regulation is maintained despite the phase shift between voltage and current. This confirms the capability for flexible reactive power control.

Figure 11 presents the response to a 25% load change. Only a small transient deviation in the DC-link voltage is observed, followed by rapid recovery. This demonstrates the robustness of the proposed control strategy under varying load conditions.

Figure 12 shows the converter response when the transformer turns ratio is changed to 2:1. The DC-link voltage remains regulated and the input current waveform remains satisfactory. This confirms stable operation under different voltage conversion conditions.

The simulation results clearly demonstrate that the proposed converter operates as an intelligent grid-interactive interface rather than a conventional power converter. By

combining voltage regulation, harmonic mitigation, and reactive power control, the proposed topology enhances both charging performance and power quality, making it well suited for next-generation smart grid EV charging infrastructure.

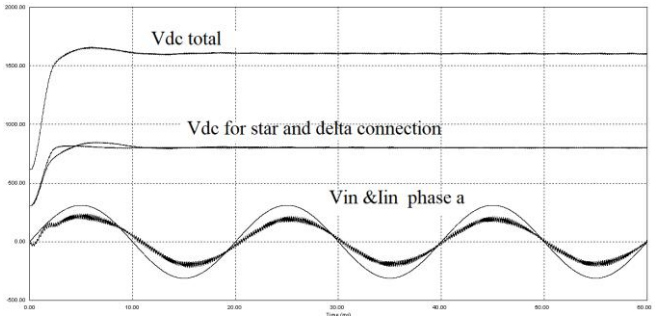

Figure 7. DC voltage, input voltage, and current at unity PF.

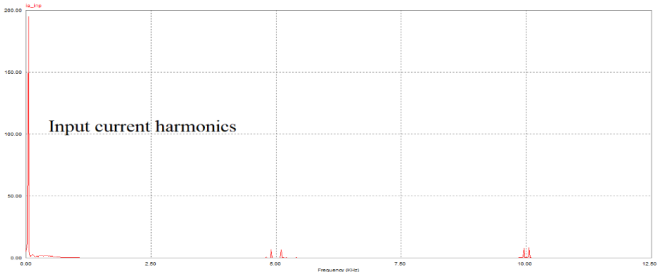

Figure 8. Input current harmonics.

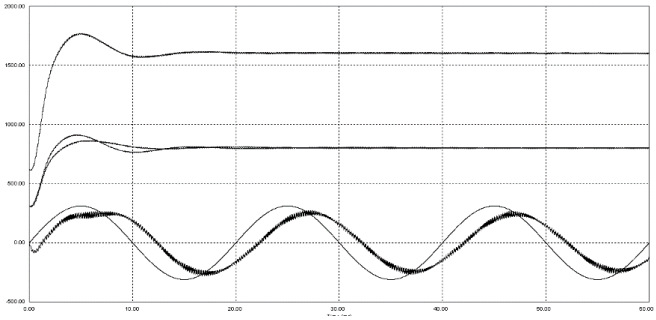

Figure 9. DC voltage, input voltage and current lagging PF.

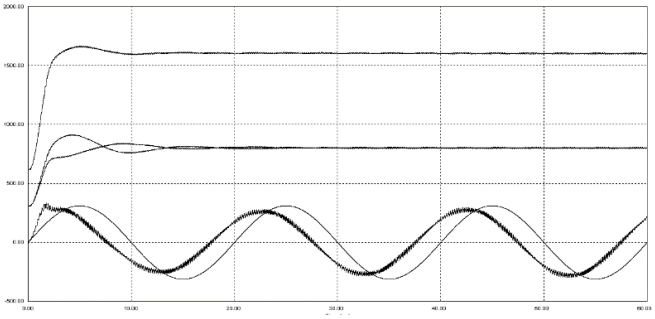

Figure 10. DC voltage, input voltage and current leading PF.

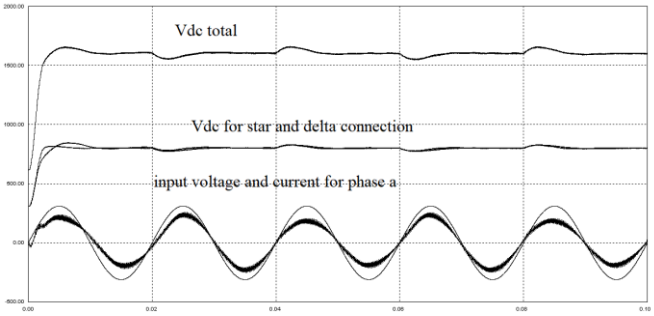

Figure 11. DC voltage, input voltage and current 25% load changing

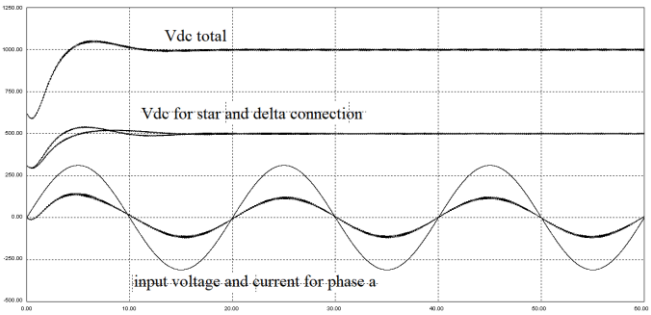

Figure 12. DC voltage, input voltage and current (changing turn ratio 2/1).

V. CONCLUSION

This paper presented a grid-interactive EV fast charging station based on a 12-pulse active rectifier employing DQ vector control. The proposed converter combines the harmonic reduction capability of 12-pulse operation with the flexibility of active power control to achieve regulated DC output voltage, near-unity power factor operation, and controllable reactive power exchange. Simulation results demonstrated effective DC-link voltage regulation, significant reduction of low-order current harmonics, and stable operation under various operating conditions, including load changes and different power factor settings. Compared with conventional rectifier systems, the proposed topology offers improved power quality and enhanced grid support capability. Therefore, the proposed converter represents a practical and effective solution for future smart-grid-connected EV fast charging stations and Vehicle-to-Grid applications.

ACKNOWLEDGMENT

The authors would like to express their sincere appreciation to Rafik Hariri University (RHU), Lebanon, and Cape Peninsula University of Technology (CPUT), South Africa, for their continuous support and encouragement throughout this research. The authors are also grateful for the academic environment, research facilities, and collaborative opportunities provided by both institutions, which significantly contributed to the completion of this work.

REFERENCES

[1] Rajendran G, et al. 2020 Energy efficient converters for electric vehicle charging stations. Published online: 9 March 2020. © Springer Nature Switzerland AG 2020.

[2] Kurczewski N. 2022 Different levels of EV charging. Car and Driver Magazine..

[3] Falvo MC, Sbordone D, Bayram S and Devetsikiotis M. 2014 EV charging stations and international standards. Conference Paper.

[4] Dusmez S, Cook A and Khaligh A. 2011 Comprehensive analysis of high quality power converters for Level 3 off-board chargers. IEEE Vehicle Power and Propulsion Conference.

[5] Kesler M, Kisacikoglu MC and Tolbert LM. 2014 Vehicle-to-grid reactive power operation using plug-in electric vehicle bidirectional off-board charger. IEEE Transactions on Industrial Electronics 61:6778–6784.

[6] Xu NZ and Chung CY. 2016 Reliability evaluation of distribution systems including vehicle-to-home and vehicle-to-grid. IEEE Transactions on Power Systems 31:759–768.

[7] Yilmaz M and Krein PT. 2013 Review of the impact of vehicle-to-grid technologies on distribution systems and utility interfaces. IEEE Transactions on Power Electronics 28(12):5673–5689.

[8] Sangeeta Sarali D and Shailaja P. 2012 Mitigation of harmonics using thyristor-based 12-pulse voltage source PWM rectifier. International Journal of Research in Engineering and Technology (IJRET) 1(3).

[9] Taha MH. 2007 Active rectifier using DQ vector control for aircraft power system. IEEE International Electric Machines and Drives Conference (IEMDC).

[10] Kisacikoglu MC, Kesler M and Tolbert LM. 2015 Single-phase on-board bidirectional PEV charger for V2G reactive power operation. IEEE Transactions on Smart Grid 6(2):767–775.

[11] M. Young, The Technical Writer's Handbook. Mill Valley, CA: University Science, 1989. Monteiro V, Pinto JG and Afonso JL. 2016 Operation modes for the electric vehicle in smart grids and smart homes: present and proposed modes. IEEE Transactions on Vehicular Technology 65(3):1007–1020.