Robust Type-2 Fuzzy Sliding Mode Control for Maximum Power Point Tracking for Wind Power Conversion Systems

BELKACEM Sebti
LEB, Dept. Of Electrical Engineering
University Batna-2, Algeria.
Batna, Algeria
Sebti.belkacem@univ-batna2.dz

BELHAIT Abdelaziz
Electromechanical Department . Mining Institute
University Larbi Tebessi (Environment laboratory)
Tebessa,Algeria

BOUKHALFA Ghoulemallah
LEB Dept. Of Electrical Engineering
University Batna-2, Algeria.
Batna, Algeria
ghoulem1987@gmail.com

COLAK Ilhami
Dept. Of Electrical Engineering Istinye University, Istanbul Turkey
ilhcol@gmail.com

***Abstract*— It is essential to optimize the profitability of wind systems in the field of renewable energy by improving the tracking of the maximum power point (MPPT). Most wind energy conversion systems (WECS) use sliding mode control (SMC), but they are often affected by the phenomenon of chattering, which reduces their efficiency and durability.**

This paper presents two advanced methods free from chattering, applied to maximum power point tracking (MPPT): Type 1 Fuzzy Logic Sliding Mode Control (T1-FL-SMC) and Type 2 Fuzzy Logic Sliding Mode Control (T2-FL-SMC). These methods combine the advantages of fuzzy logic and SMC to improve the stability and efficiency of wind systems using a doubly-fed induction generator (DFIG). According to the results, these methods enhance the robustness and energy efficiency, with T2-FL-SMC showing superiority in handling complex uncertainties..

Keywords*— *wind energy conversion systems (WECS), Maximum Power Point (MPPT), Sliding Mode Control, Chattering, type 1 fuzzy logic controllers (T1-FLC), type 2 fuzzy logic controllers (T2-FLC).

I. INTRODUCTION

The contribution of wind energy is crucial in the transition towards sustainable energy sources, offering an environmentally friendly alternative to fossil fuels. Wind energy conversion into electricity plays a significant role in reducing greenhouse gas emissions and increasing renewable energy production [1]. However, it is essential to continuously improve the efficiency of wind energy conversion systems (WECS) to maintain the competitiveness of this technology. This involves optimizing energy extraction while ensuring greater stability against wind fluctuations and external disturbances [2]. The monitoring of the maximum power point (MPPT) plays a crucial role in optimizing energy extraction in wind energy conversion systems (WECS). In this context, strategies based on the Tip Speed Ratio (TSR) are among the most commonly used [3]. Through this method, energy extraction efficiency can be maximized by continuously adjusting the turbine's operation in response to wind variations. However, to achieve optimal efficiency with this method, it is essential to have a robust controller capable of handling the non-linearities and uncertainties of the WECS [4].

Classical linear controllers, such as PI and PID regulators, are often unable to manage the non-linear complexity and sudden disturbances inherent to WECS [5]. To overcome these limitations, more advanced methods are employed. Sliding Mode Control (SMC) offers significant advantages over other linear control methods like PI. SMC responds more quickly and can handle parametric uncertainties [6]. The main drawback of the traditional sliding mode method lies in the creation of undesirable vibratory effects and chattering phenomena, which can be detrimental to the system.

Thus, control systems have been developed that combine Fuzzy Logic (FL) with Sliding Mode Control (SMC), offering a more robust approach to managing wind-related uncertainties and system dynamics, providing an adaptive solution [7].

MPPT-T1-FL-SMC (Type 1 Fuzzy Logic Sliding Mode Control) combines the robustness of SMC with the flexibility of fuzzy logic. Through coordination, this method effectively addresses the uncertainties and inaccuracies inherent in wind energy systems by dynamically adapting the controller parameters based on wind variations. The use of MPPT TSR allows MPPT-T1-FL-SMC to increase the extracted power while optimizing power conversion. Despite the significant improvement in system performance compared to traditional techniques, this method has certain limitations when dealing with more complex uncertainties, such as those related to the fuzzy parameters themselves.

To overcome these limitations, an enhanced variant of FL-SMC that uses Type 2 fuzzy logic is proposed, called MPPT-T2-FL-SMC. Unlike Type 1 fuzzy logic, Type 2 fuzzy logic accounts for both input data uncertainty and fuzzy parameter

uncertainty. This helps better manage complex dynamic uncertainties and ensures optimal performance even in environments with unpredictable wind speeds. MPPT-T2-FL-SMC is ideal for environments where wind conditions are highly variable, as it enhances robustness and ensures optimal operation despite external disturbances.

According to the simulation results, the MPPT-T2-FL-SMC method significantly reduces power oscillation, response time, and energy consumption compared to the MPPT-T1-FL-SMC method and the conventional MPPT-SMC method. Thus, this robust control method ensures greater efficiency and reliability in wind energy conversion systems (WECS).

II. TURBINE MODEL

The aerodynamic power generated by the wind can be represented using the following equation (1) [8] :

$$p_t = \frac{1}{2}\rho\pi R_t V^3 Cp(\lambda,\beta) \quad (1)$$

The air density is represented by ρ = 1.225 kg/m^3, and (R_t) represents the blade length, (V) represents the wind speed. The tip speed ratio (λ) and pitch angle (β) determine the performance coefficient or Cp. The equations (2) and (3) represent Cp (λ, β): [9]

$$Cp(\lambda,\beta) = 0{,}5176\left(\frac{116}{\lambda_i} - 0{,}4\beta - 5\right)e^{\frac{-21}{\lambda_i}} + 0.0068\lambda \quad (2)$$

Where:

$$\frac{1}{\lambda_i} = \frac{1}{\lambda+0.08\beta} - \frac{0{,}035}{\beta^3+1} \quad (3)$$

The speed ratio is the relationship between the wind speed and the blades' linear speed (Ωt. R):

$$\lambda = \frac{\Omega_t.R_t}{V} \quad (4)$$

The formula for the aerodynamic torque is:

$$T_t = \frac{p_t}{\Omega_t} = \frac{1}{2}Cp(\lambda,\beta)\rho\pi R_t V^3 \frac{1}{\Omega_t} \quad (5)$$

The gearbox makes sure that the turbine rotor's low speed (Ω1) is adjusted to the DFIG high speed (Ω2).

$$T_{mec} = \frac{T_t}{G} \quad (6)$$

$$\Omega_t = \frac{\Omega m}{G} \quad (7)$$

The torque (Tt) and speed (Ωt) of the turbine can be utilized to compute the speed (Ωm) and torque (Tm) of the DFIG using equations (6) and (7).

III. TSR-BASED MPPT ALGORITHM STRUCTURE

The MPPT method involves regulating the rotational speed of the turbine by electromagnetically modulating the torque to adjust the rotational speed to the reference speed. The maximum value of the aerodynamic power coefficient $Cp(\lambda,\beta)$ is known as the maximum power coefficient $p = CpMax$. Thus, the optimal value of the tip speed ratio for the turbine is achieved $\lambda\, opt$ consequently; the reference speed of the generator $\Omega_{g_{ref}}$ can be calculated using the following formula [9]:

$$\Omega_{g_{ref}} = G\frac{\lambda_{opt}}{R}V \quad (8)$$

"Figure 1 presents the block diagram of the MPPT-PI strategy applied to a Wind Energy Conversion System (WECS)."

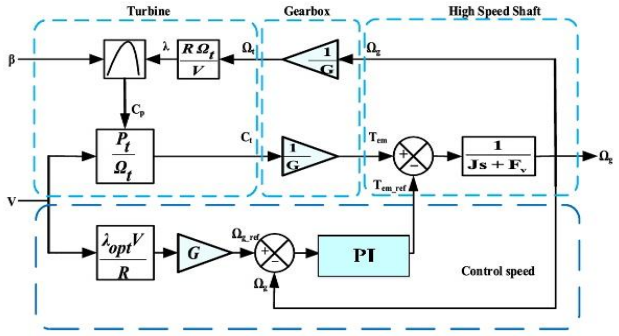

Fig. 1. MPPT method based on the TSR algorithm utilizing an PI controller

IV. MPPT-SMC TECHNIQUE

Sliding Mode Control (SMC) is commonly used to optimize the performance of wind systems [10]. In this context, it is particularly effective due to its benefits, such as simplicity, robustness against parametric uncertainties, and high accuracy compared to traditional linear techniques like Proportional-Integral (PI) controllers. The Maximum Power Point Tracking (MPPT) of the SMC algorithm relies on the Tip Speed Ratio (TSR) in the field of wind energy [11]. Depending on changing wind conditions, the algorithm improves the power factor by adjusting the electromagnetic torque of the generator to achieve a speed close to the reference value. The sliding surface of the SMC method is defined by equation (9) to accurately measure the optimal reference speed and maximize the captured energy.

$$s(t) = \Omega\mathrm{m}(t) - \Omega\mathrm{m}_{ref}(t) \quad (9)$$

$$\Omega m_{ref} = \lambda_{opt} \frac{v}{R} \quad (10)$$

ω_{ref}, which is equivalent to λopt, the ideal TSR.

The time derivative of equation (11) can be expressed as follows:

$$\dot{s}(t) = \dot{\Omega m}(t) - \dot{\Omega m_{ref}}(t) \quad (11)$$

To evaluate the stability of a sliding mode controller, it is necessary to analyse the Lyapunov function as described in equation (12). This control law aims to drive the system's state trajectory toward the sliding surface and maintain it there, even in the presence of uncertainties [12].

$$V(s) = \frac{1}{2}s^2 \quad (12)$$

The control variable U is composed of two elements: a discontinuity that regulates the dynamic response to ensure convergence to the sliding mode, and an equivalent control that enhances the attraction of the state trajectory to the sliding surface. The equivalent control is represented by Ueq, while the switching control signal is denoted as Un.

$$U = Ueq + Un \quad (13)$$

Finally, the standard control structure for SMC is generally as follows:

$$u = -k.sign(s) \quad (14)$$

k is the control gain, and U is the command applied to adjust the electromagnetic torque of the generator.

A block diagram of the MPPT-SMC strategy for a wind energy system is presented in Figure 2.

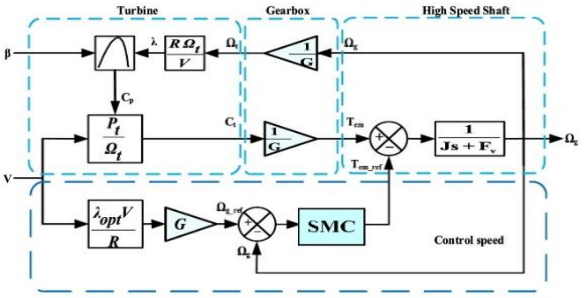

Fig. 2. MPPT method based on the TSR algorithm utilizing an SMC controller

V. MPPT-T1-FL-SMC TECHNIQUE

The FL control method, developed by Zadeh in 1965 [13], is widely used in various sectors [14]. Traditional SMC algorithms are adapted to T1-FL-SMC algorithms. In this case, the switching controller sgn(U) has been replaced by a fuzzy logic controller. This method is detailed in [5]. Equation (15) can be used to mathematically describe the designed T1-FL-SMC approach.

$$u = -k.(T1_FL) \quad (15)$$

The input and output membership functions in and T1-FL are shown in Fig. 3.

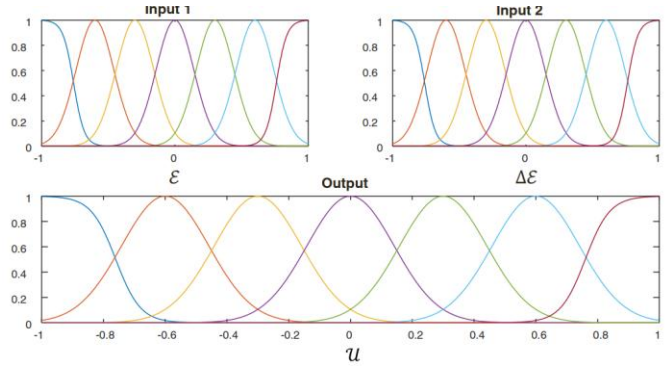

Fig. 3. Membership functions of T1-FLC.

Figure 4 shows the MPPT T1-FL-SMC strategy block diagram for a WECS.

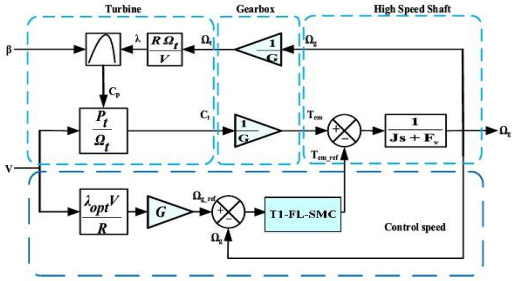

Fig. 4. MPPT method based on the TSR algorithm utilizing an T1-FL-SMC controller.

VI. MPPT-T2-FL-SMC TECHNIQUE

Due to their prowess in managing uncertainties, Type-2 fuzzy logic controllers (T2 FLCs) have the potential to become a new breed of intelligent controllers, often surpassing their Type-1 equivalents in numerous instances. This section provides a review of current studies utilizing T2 FLCs [15].

Figure 5 The input and output membership functions in and T2-FL .

The main distinction between this controller and its Type-1 FLC counterpart lies in the fact that there is at least one Type-2 fuzzy set implemented in the Type-2 FLC. The Type-2

fuzzy set can overcome the limitations of Type-1 fuzzy sets in handling system uncertainties due to its nature.

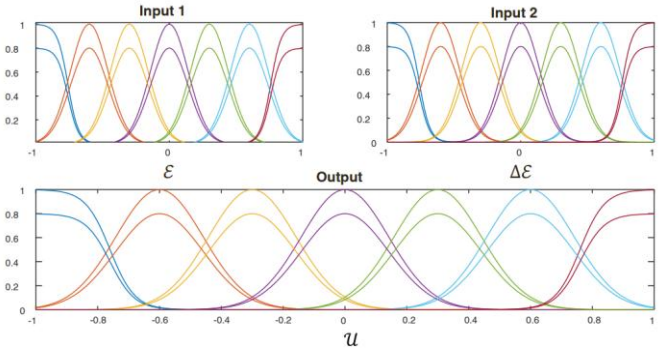

Fig. 5. The structure Membership functions of T2-FLC.

A type-2 membership function (MF)$\mu_{\tilde{A}}(x,u)$ characterizes an IT2-FLC set represented by $\tilde{A}$, which can be explained as follows:

$$\tilde{A} = \{(x,u), \mu_{\tilde{A}}(x,u)\} \forall_x \in X, \forall_u \in J_x^u \subseteq [0,1] \quad (16)$$

which can be expressed as follows:

$$x \in X, x \in J_x \subseteq [0,1] and\ 0 \le \mu_{\tilde{A}}(x,u) \le 1 \quad (17)$$

An expression for $\tilde{A}$ could be

$$\tilde{A} = \int_{x\in X}^{0} \int_{u\in J_x}^{0} \frac{\mu_{\tilde{A}}(x,u)}{(x,u)}, J_x \subseteq [0,1] \quad (18)$$

Where ($\int_{x\in X}^{0} \int_{u\in J_x}^{0}$) represents the union of all allowed input variables, (x) and (u). In this case, (J_x) is referred to as the primary membership function (MF) of a Type-2 Fuzzy Logic Controller (T2-FLC) set of (x), and $\mu_{\tilde{A}}(x,u)$ is the secondary MF equal to 1. Here, (u) is the primary grade of a T2-FLC set, (x) is the input variable's value, and (X) is its primary domain. The ($\tilde{A}$) is expressed in Eq. (19).

$$\tilde{A} = \int_{x\in X}^{0} \int_{u\in J_x}^{0} \frac{1}{\mu_{\tilde{A}}(x,u)}, J_x \subseteq [0,1] \quad (19)$$

$$\tilde{A}: X \to \{[a,b]: 0 \le a \le b \le 1\}$$

The uncertainty fingerprint is the union of all primary MFs.

$$Fou(\widetilde{A}) = \cup_{\forall x\in X} J_x = \{(x,u): u \in J_x \subseteq [0,1]\} \quad (20)$$

The membership function (MF) of an Interval Type-2 Fuzzy Set (IT2-FS) is called a Gaussian IT2-FS when it takes on the form of a Gaussian function. The current Gaussian IT2-FS frequently takes on one of two forms due to the blurring of the embedded Gaussian Type-1 Fuzzy Set (T1-FS) [16].We will utilize in our research, where the mean value (μ) varies from (μ_1) to (μ_2) , while the standard deviation ($\boldsymbol{\sigma}$) stays constant. In this case, ($\widetilde{X}$))denotes the resulting Gaussian Interval Type-2 Fuzzy Set (IT2-FS), while (X) stands for the original Gaussian (T1-FS). Furthermore, the upper and lower MFs of the Gaussian IT2-FS are indicated by ($\overline{X}$) and ($\underline{X}$), respectively. Equations (10) and (11) define the MF.

$$UMF(x) = \begin{cases} e^{-\frac{(x-\mu_1)^2}{\sigma^2}}, x<\mu_1 \\ 1, \mu_1 \le x \le \mu_2 \\ e^{-\frac{(x-\mu_2)^2}{\sigma^2}}, x<\mu_2 \end{cases} \quad (21)$$

$$LMF(x) = \left\{ e^{-\frac{(x-\mu_1)^2}{\sigma^2}}, e^{-\frac{(x-\mu_2)^2}{\sigma^2}}, \right\} \quad (22)$$

Keep in mind that (J_x) is a set of intervals.

$$J_x\{(x,u): u \in [\underline{\mu}_A^{-}(x), \underline{\mu}_A^{-}(x)]\} \quad (23)$$

The embedded fuzzy set $\tilde{A}$ is expressed by equation (24).

$$\tilde{A}_e = \int_{x\in X}^{\cdot} \left(\frac{[1/u]}{x}\right), u \in J_x \quad (24)$$

The equation is used to express the FL rule.

$$Rl: if\ x_1 is \tilde{X}_1^l and\ x_p is\ \tilde{X}_p^l \text{ then } y_l is\ \tilde{y}^l, l = 1, M \quad (25)$$

The activation intensity of the l rule is expressed by equation (26)

$$F^l = \left[\underline{\mu_{\tilde{A}}(x)} \times \underline{\mu_{\tilde{A}}(x_p)}, \overline{\mu_{\tilde{A}}(x_1)} \times \ldots\ldots \overline{\mu_{\tilde{A}}(x_p)}\right] = \left[\underline{f^l}, \overline{f^l}\right] \quad (26)$$

The center-of-gravity (COG) approach reduction for the IT2-FLC is expressed in Eq. (27).

$$Y_{COG} + U_{f^n \epsilon F^n, y_n \in Y_n} \frac{\sum_{n=1}^{N} f^n y_n}{\sum_{n=1}^{N} f^n} = [y_l, y_r] \quad (27)$$

where the TR method can yield y_l and y_r. After final defuzzification, the output of IT2-FLC is obtained as follows:

$$y = \frac{y_l + y_r}{2} \quad (28)$$

The set $\tilde{A}_e$ needs to be a part of $\tilde{A}$ for the secondary MFs to always be the same at every value of x A significant number of built-in T1-FSs are combined to create the T2-FS; the addition of more classification levels results in a smoother driving surface and responsiveness. The analytical driving surface is described in depth. Consequently, each T1-FS is incorporated to make a FOU, and T2-FS is a combination of numerous distinct T1-FLC combinations [17].

The designed T2-FL-SMC approach can be mathematically represented by equation (30).

$$u = -k.(T2_FL) \quad (29)$$

The MPPT-T2-FL-SMC is specifically developed for environments where wind conditions are extremely variable. This system ensures greater resilience and proper operation, even in the presence of external disturbances. The block diagram of the MPPT T2-FL-SMC strategy applied to wind energy conversion systems (WECS) is presented in Figure 6.

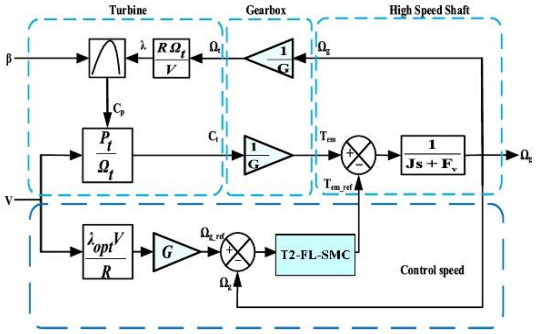

Fig. 6. MPPT method based on the TSR algorithm utilizing an T2-FL-SMC controller.

VII. SIMULATIONS RESULTS

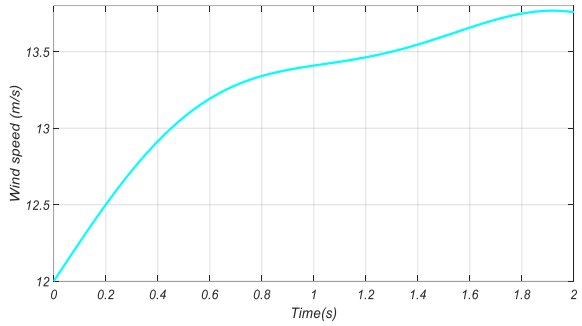

Fig. 7. Wind speed profile

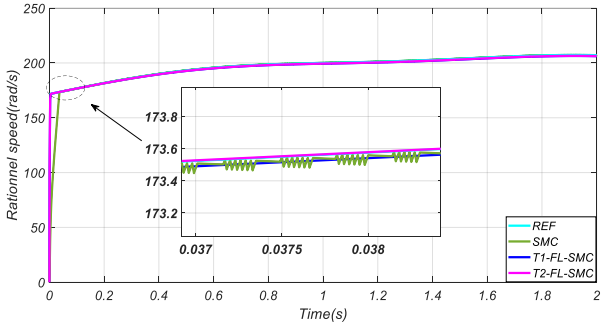

Fig. 8. Rotational speed(Ωm)

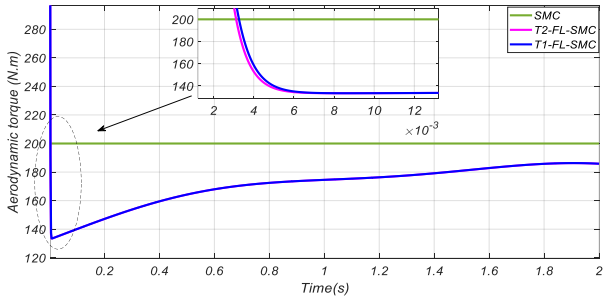

Fig. 9. Aerodynamic torque

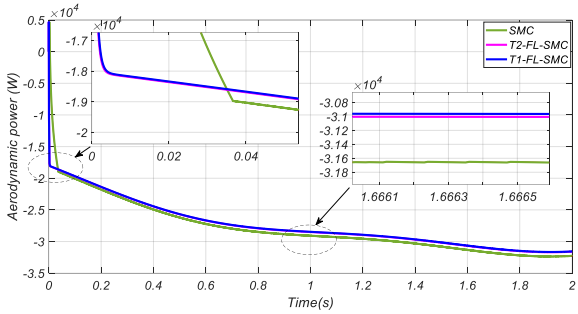

Fig. 10. power turbine

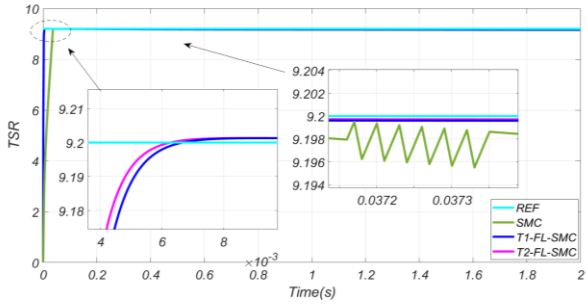

Fig. 11. Tip speed ration (TSR)

The objective of this test is to evaluate the results of the T2-FL-SMC control method provided with the MPPT-T2-FL-SMC approach at varying wind speeds. The study conducted using MATLAB confirmed the effectiveness, robustness, and ease of use of this controller, highlighting different essential measurements such as reference tracking and operating time. Graphical representation 7 illustrates the variable wind speed profile used in the simulation. Through these various wind profiles, Figures 8 and 9 depict the variations in machine speed and aerodynamic torque resulting from the MPPT, reflecting the different wind profiles. It is important to note that MPPT-T2-FL-SMC offers advantages over the MPPT-T1-FL-SMC and MPPT-SMC methods concerning the reduction of speed and torque variations. Figure 10 illustrates the power output profile of the turbine for each management strategy. The preferred method for MPPT control is MPPT-T2-FL-SMC, with a MPPT-SMC controller compared to MPPT-T1-FL-SMC. Figure 11 shows how the tip speed ratio (TSR)

evolves over time, demonstrating that this value is independent of changes in wind speed and remains constant throughout the simulation process for both controllers. Although the TSR value remains close to 9.2, it is more fluctuating for MPPT-SMC than for MPPT-T1-FL-SMC and MPPT-T2-FL-SMC.

VIII. CONCLUSION

The evaluation of wind energy conversion systems involved three different MPPT controllers (SMC, T1-FL-SMC, and T2-FL-SMC) in this comparative study. This is the basis of the TSR algorithm (Tip Speed Ratio).

The T2-FL-SMC performs better than T1-FL-SMC and traditional TSR-based MPPT algorithms, making it the most effective solution. It's clear that T2-FL-SMC is an effective method for improving the efficiency of wind energy conversion systems, and it's important to select an appropriate MPPT strategy

This study utilizes TSR-based MPPT controllers to provide an overview of the technologies that can be used to improve the performance of wind energy conversion systems (WECS), resulting in reducing T2-FL to maximum power extraction. The SMC's remarkable efficiency is also highlighted.

REFERENCES

[1] Mazouz, F., Belkacem, S., & Boukhalfa, G. (2022). Second Order Sliding Mode Control Based DPC of DFIG Using SVM. In Artificial Intelligence and Heuristics for Smart Energy Efficiency in Smart Cities: Case Study: Tipasa, Algeria (pp. 743-750). Springer International Publishing.

[2] S. Ghoudelbourk, D. Dib, A. Omeiri, and A.T. Azar, "MPPT control in wind energy conversion systems and the application of fractional control (PIα) in pitch wind turbine," in International Journal of Modelling Identification and Control, January 2016. DOI: 10.1504/IJMIC.2016.078329

[3] Saidi, Y., Mezouar, A., Miloud, Y., Benmahdjoub, M. A., & Yahiaoui, M. (2018). Modeling and comparative study of speed sensor and sensor-less based on TSR-MPPT method for PMSG-WT applications. International Journal of Energetica (IJECA), 3(2), 6-12. J

[4] R. Z. Caglayan, K. Kayisli, N. Zhakiyev, A. Harrouz, and I. Colak, "A Review of Hybrid Renewable Energy Systems and MPPT Methods," *International Journal of Smart Grid*, vol. 6, no. 3, pp. 72–78, Sep. 2022.

[5] B. M. Bellah, B. Tahar, and B. Adel**,** "Adaptive Hybrid MPPT Using Artificial Intelligence for an Autonomous PV System," *International Journal of Smart Grid*, vol. 8, no. 1, pp. 27–34, Mar. 2024, doi: 10.20508/ijsmartgrid.v8i1.328.g331.

[6] Khan, U. H., Khan, Q., Khan, L., Alam, W., Ali, N., Khan, I., ... & Khan, R. A. (2021). MPPT control paradigms for PMSG-WECS: A synergistic control strategy with gain-scheduled sliding mode observer. IEEE Access, 9, 139876-139887.

[7] Lin, H., Yin, Y., Shen, X., Alcaide, A. M., Liu, J., Leon, J. I., ... & Wu, L. (2021). Fuzzy logic system-based sliding-mode control for three-level NPC converters. IEEE Transactions on Transportation Electrification, 8(3), 3307-3319.

[8] F. Mazouz, S. Belkacem, and I. Colak, "DPC-SVM of DFIG Using Fuzzy Second Order Sliding Mode Approach," *International Journal of Smart Grid*, vol. 5, no. 4, pp. 174–182, Dec. 2021.

[9] Belhait, A., Louafi, M., Ghoudelbourk, S., Boukhalfa, G., & Milles, A. (2024, May). Comparative Study of Three Types of MPPT Controllers for a Wind Energy Conversion System. In 2024 2nd International Conference on Electrical Engineering and Automatic Control (ICEEAC) (pp. 1-6). IEEE.

[10] Sahri, Y.; Tamalouzt, S.; Belaid, S.L.; Bajaj, M.; Ghoneim, S.S.; Zawbaa, H.M.; Kamel, S. Performance improvement of Hybrid Systembased DFIG-Wind/PV/Batteries connected to DC and AC grid by applying Intelligent Control. Energy Rep. 2023, 9, 2027–2043.

[11] L. Ouada, S. Benaggoune, S. Belkacem, Neuro-fuzzy Sliding Mode Controller Based on a Brushless Doubly Fed Induction Generator, International Journal of Engineering (IJE), IJE TRANSACTIONS B: Applications Vol. 33, No. 2, 2020.

[12] Kairous, D., & Belmadani, B. (2015). Robust fuzzy-second order sliding mode based direct power control for voltage source converter. International Journal of Advanced Computer Science and Applications, 6, 167–175.

[13] H. Benbouhenni, H. Gasmi, and N. Bizon, "Direct Reactive and Active Power Regulation of DFIG using an Intelligent Modified Sliding-Mode Control Approach," *International Journal of Smart Grid*, vol. 6, no. 4, pp. 157–171, Dec. 2022, doi: 10.20508/ijsmartgrid.v6i4.266.g252F.

[14] Mazouz, S. Belkacem, S. Drid, L. Chrifi-Alaoui and I. Colak, Fuzzy Sliding Mode Control of DFIG applied to the WECS. Proceedings of the 8th International Conference on Systems and Control, Marrakech, Morocco, October 23-25, 2019.Mohd Zaihidee, F., Mekhilef, S., & Mubin, M. (2019). Robust speed control of PMSM using sliding mode control (SMC)—A review. Energies, 12(9), 1669.

[15] A. Belkaid, K. Kayisli, I. Colak, S. Hadji, and O. Guenounou, "Smart Power Conditioning Unit Utilizing Enhanced Inc-Con MPPT for Photovoltaic Power Plants," *International Journal of Smart Grid*, vol. 8, no. 1, pp. 41–45, Mar. 2024, doi: 10.20508/ijsmartgrid.v8i1.330.g335.

[16] Bali, V., Bali, S., Gaur, D., Rani, S., & Kumar, R. (2023). Commercial-off-the shelf vendor selection: A multi-criteria decision-making approach using intuitionistic fuzzy sets and TOPSIS. Operational research in engineering sciences: Theory and applications, 6(2).N

[17] F. Amrane, A. Chaiba, H. Benbouhenni, B. Francois, O. Gherouat, and H. Itouchene**,** "Real Time Assessment of Robust Power Control based DFIG-WT: Power Quality Enhancement Delivered to the AC Balanced Load using dSPACE-1103," *International Journal of Smart Grid*, vol. 10, no. 2, pp. 85–99, Jun. 2026, doi: 10.20508/ijsmartgrid.v10i2.558.g424

[18] Lu, X., & Liu, M. (2016). Optimal design and tuning of PID-type interval type-2 fuzzy logic controllers for delta parallel robots. International Journal of Advanced Robotic Systems, 13(3), 96.

[19] A. I. Nusaif and A. L. Mahmood**,** "MPPT Algorithms (PSO, FA, and MFA) for PV System Under Partial Shading Condition, Case Study: BTS in Algazalia, Baghdad," *International Journal of Smart Grid*, vol. 4, no. 3, pp. 100–110, Sep. 2020, doi: 10.20508/ijsmartgrid.v4i3.113.g99.

[20] Chen, M., Lam, H.K., Xiao, B., Zhou, H., 2021. Membership-function-dependent control design of interval type-2 sampled-data fuzzy-model-based output-feedback tracking control system. IEEE Trans. Fuzzy Syst. 30 (9), 3823–3832. https://doi.org/ 10.1109/TFUZZ.2021.3130303